Ubiquiti UniFi U7 Mesh

Navodila za namestitev

Dostopna točka WiFi 7 z zaščito IPX6.
Izberite način postavitve; v navodilih so označeni s črkami A–D.

A **Namizna namestitev**
postavitev na ravno površino; kabel pri dnu naprave

B **Stena, kabel skozi steno**
nosilec na steno z vijaki; kabel skozi izvrtino Ø18 mm

C **Stena, kabel po steni**
nosilec na steno z vijaki; kabel po površini stene

D **Montaža na drog**
nosilec na drog s priloženima trakovoma

Angleška besedila v slikah (npr. Internet, UniFi Cloud Gateway) so poimenovanja naprav.

Vsebina paketa

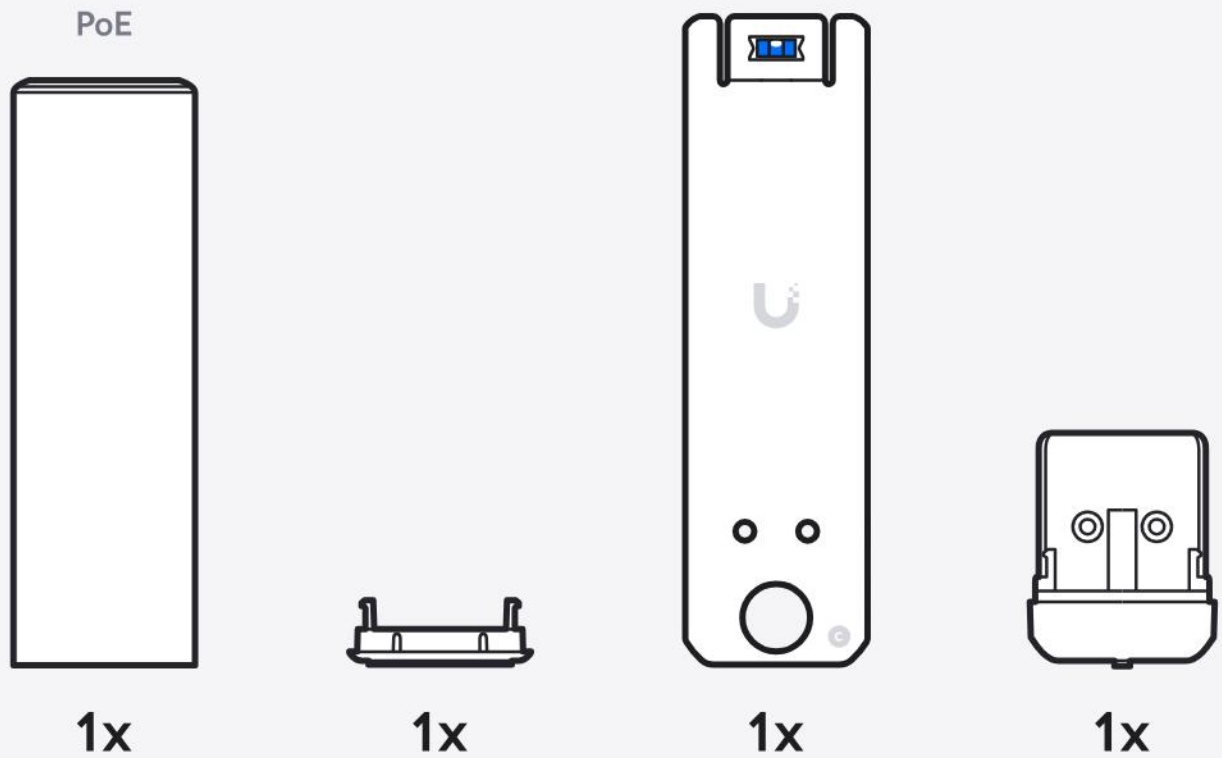

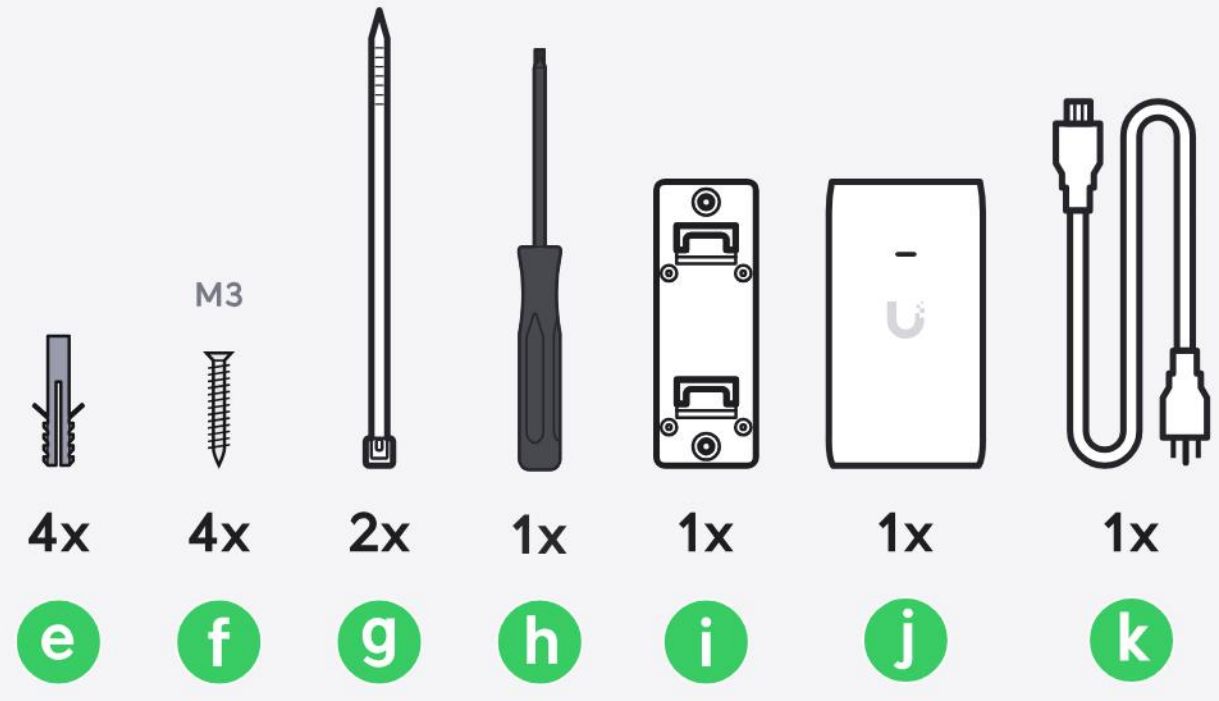

Način A: Namizna namestitev

Postavitev na ravno površino; kabel pri dnu naprave

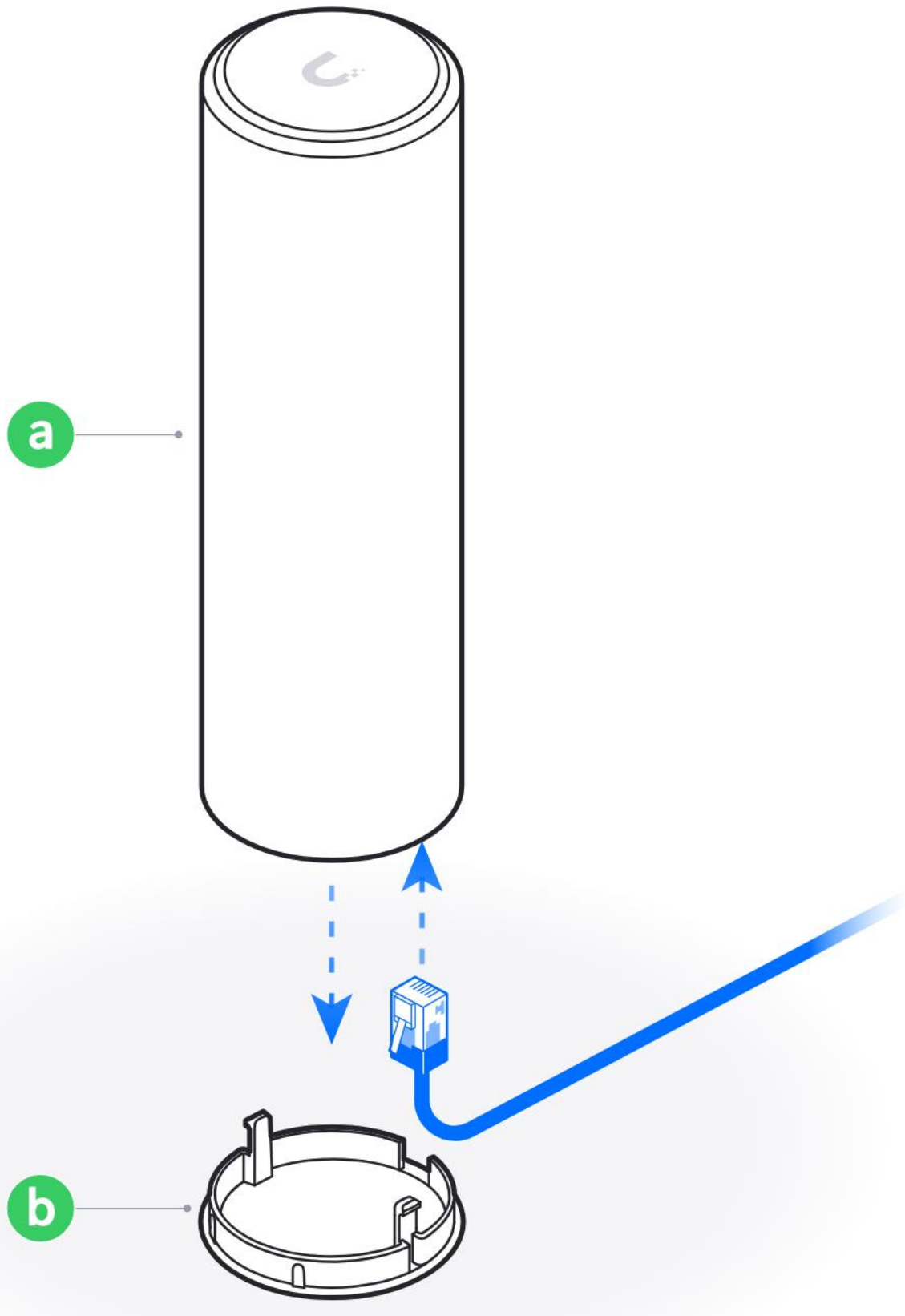

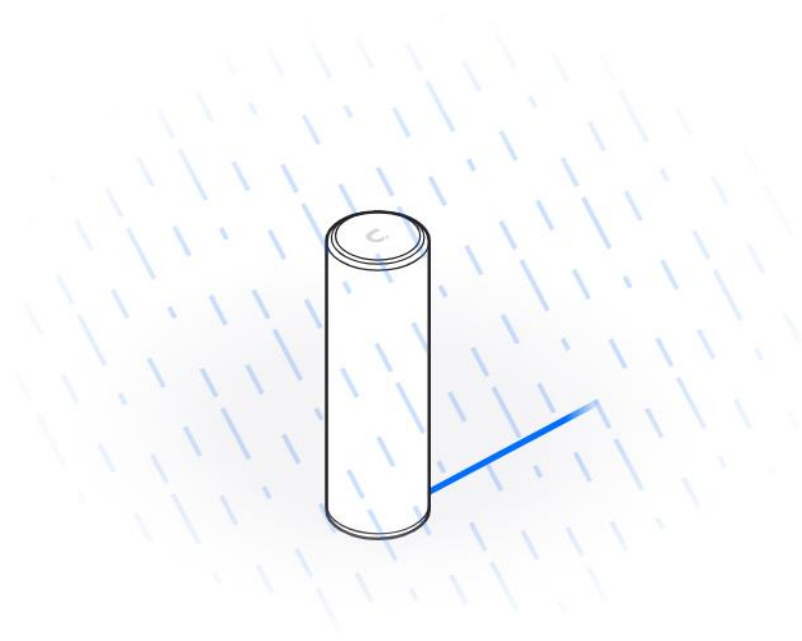

1

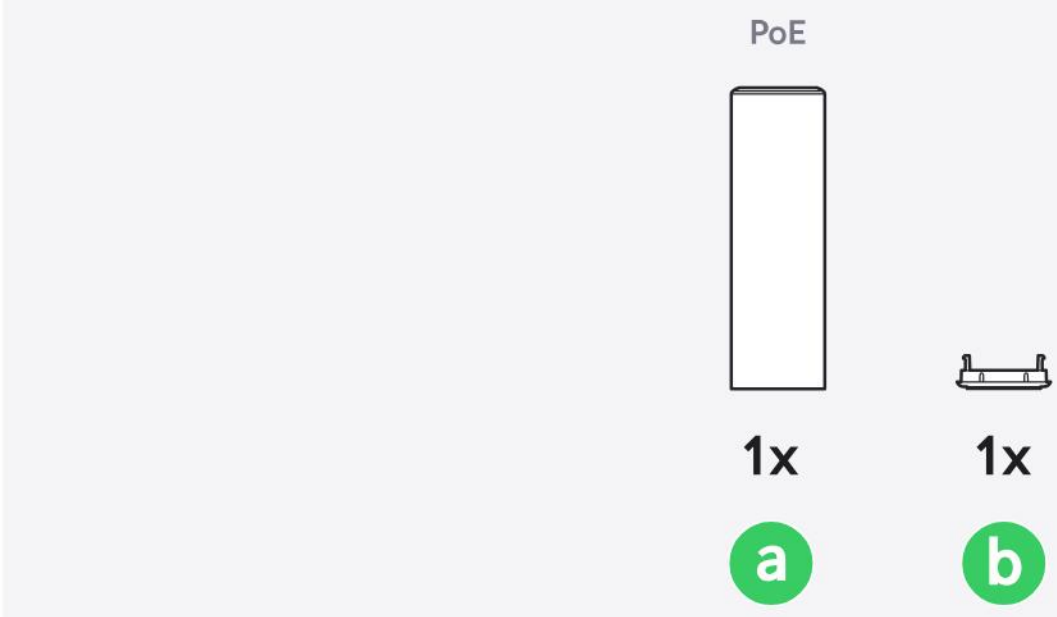

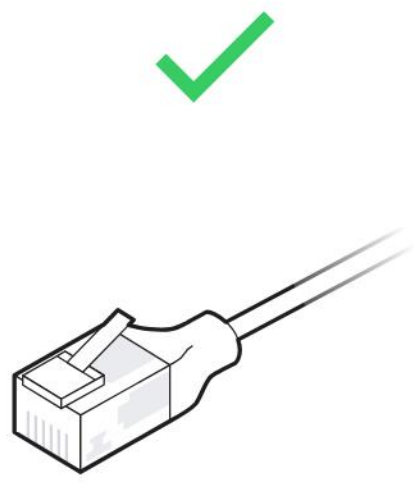

UniFi Etherlighting Patch Cable

Buy ›

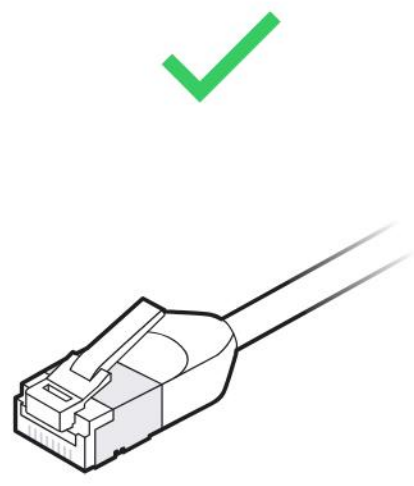

UniFi Premium Patch Cable Outdoor

Buy ›

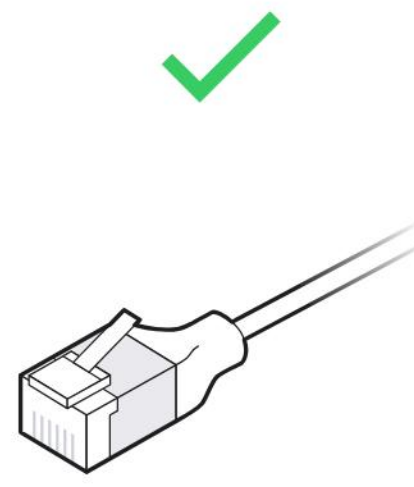

UniFi Premium Patch Cable

Buy ›

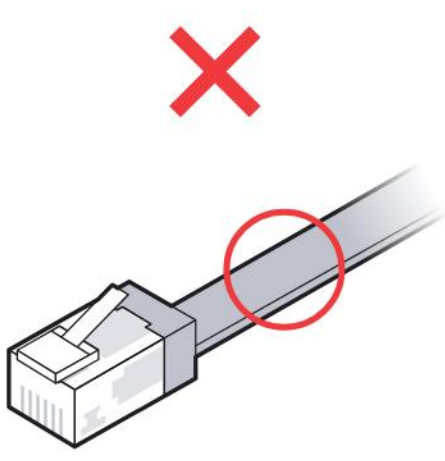

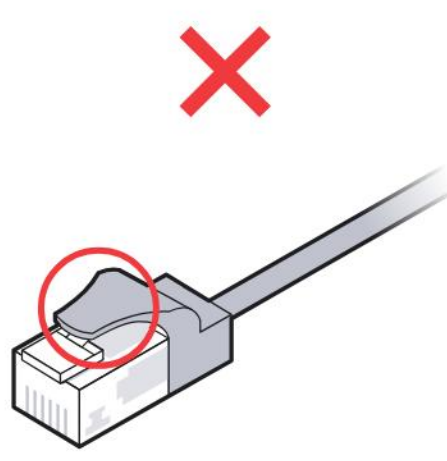

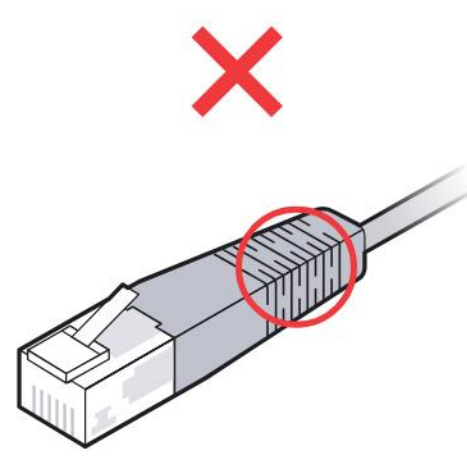

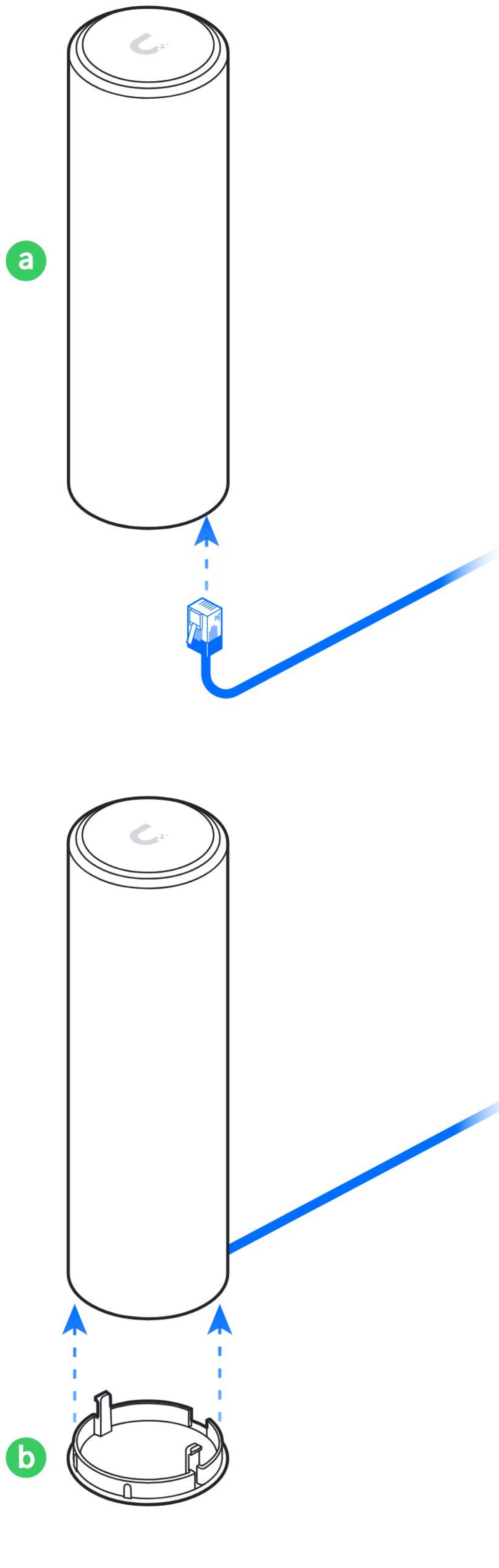

2

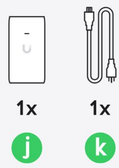
1x
1x
j
k

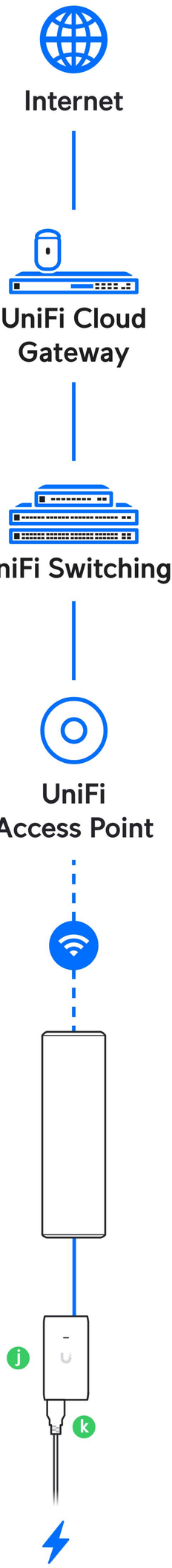
Internet
UniFi Cloud Gateway
UniFi Switching
UniFi Access Point
j
k

3

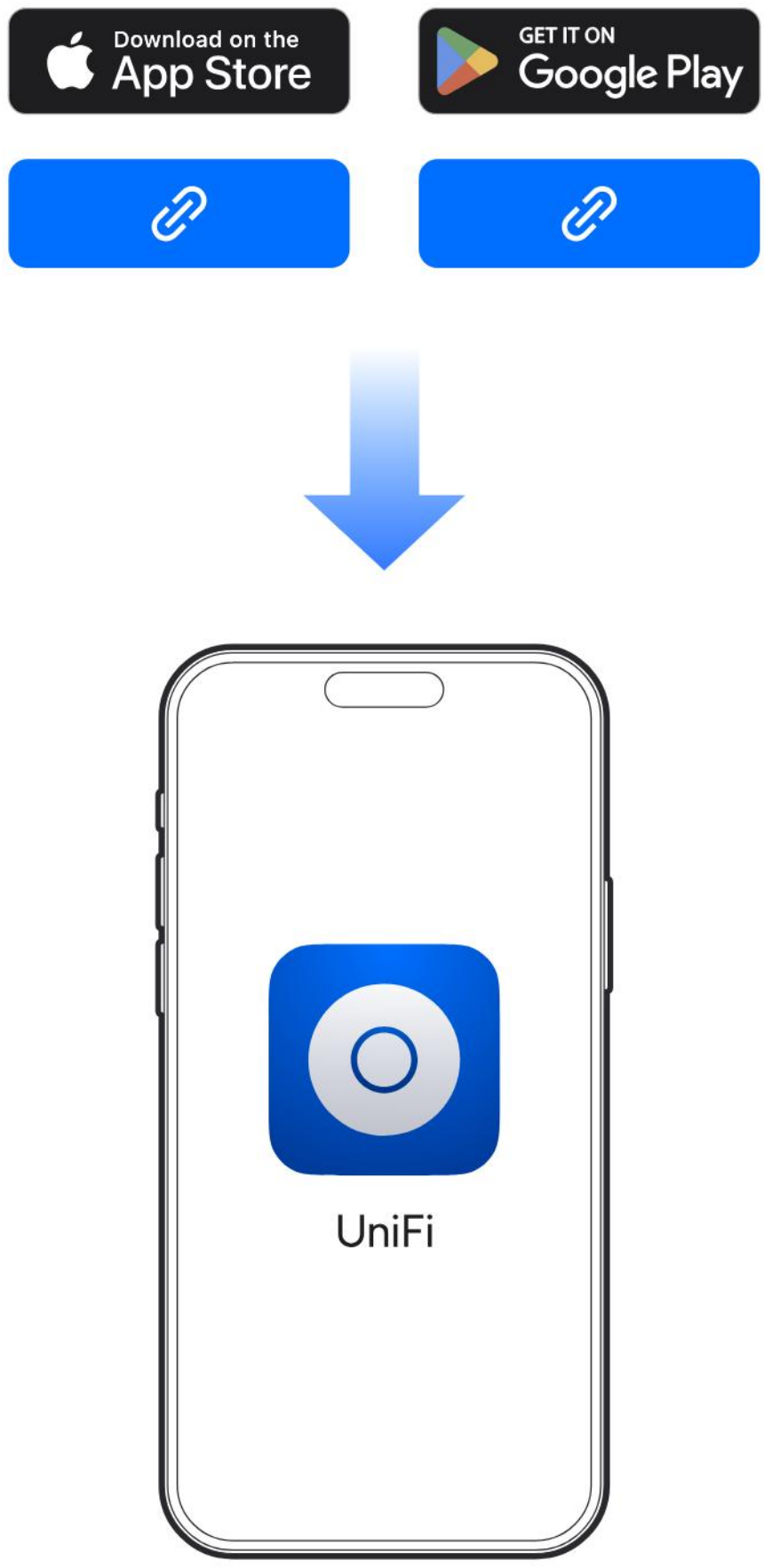

4

Point the U7 Mesh U logos toward each other for the best mesh signal.

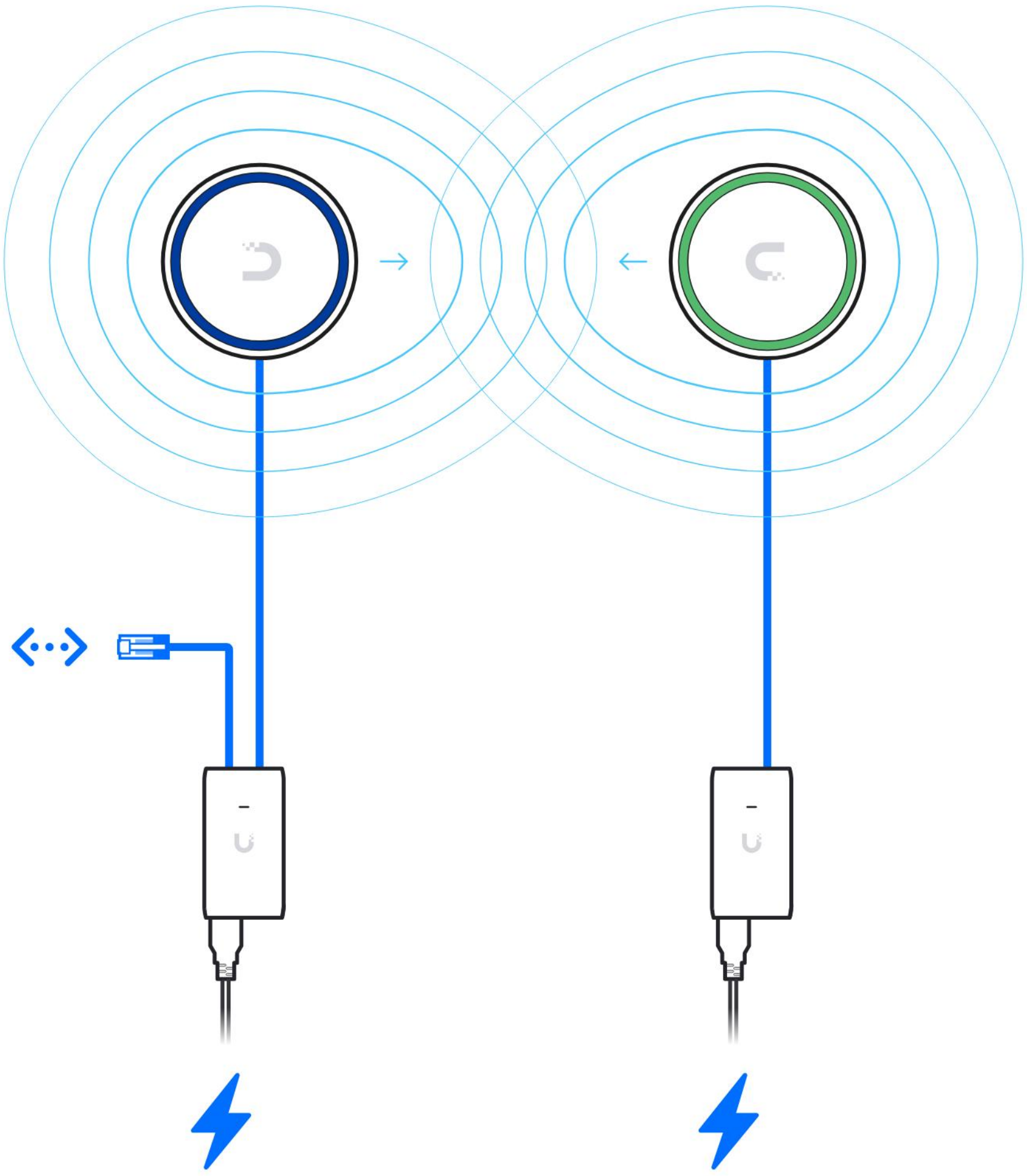

Check the LED ring to find the strongest mesh signal.





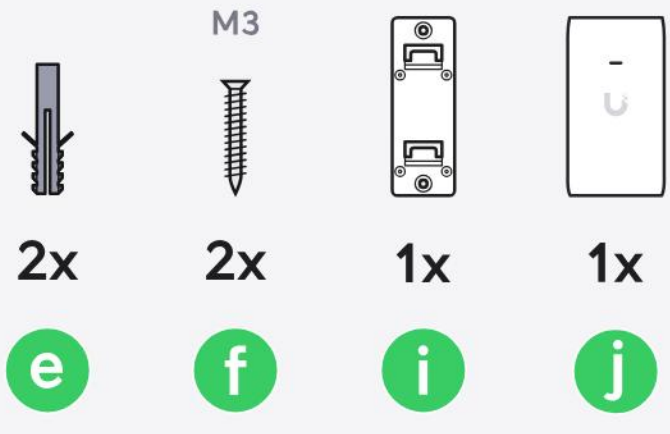

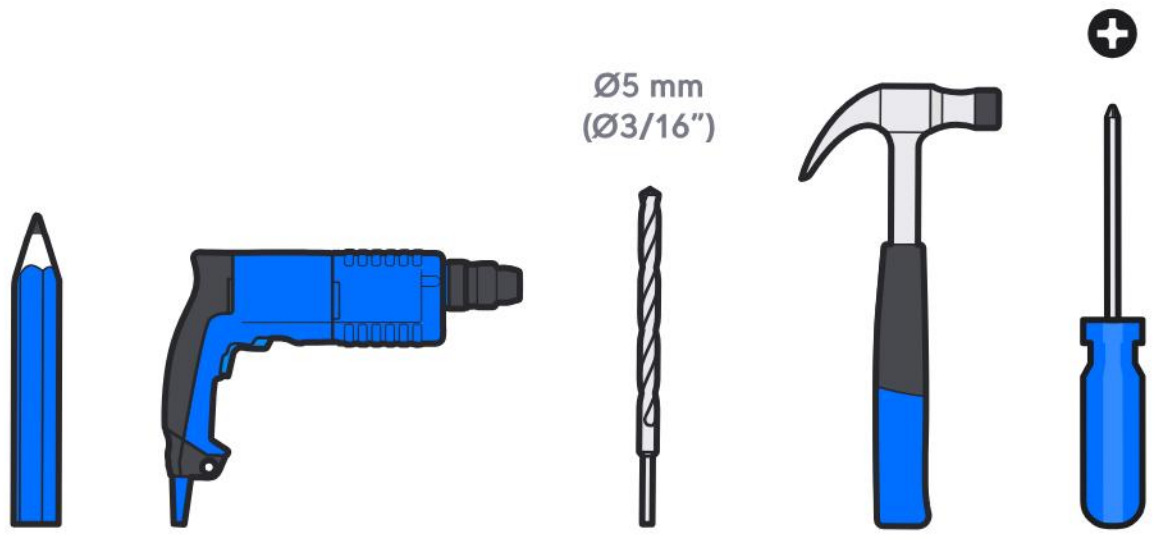
Ø5 mm
(Ø3/16")

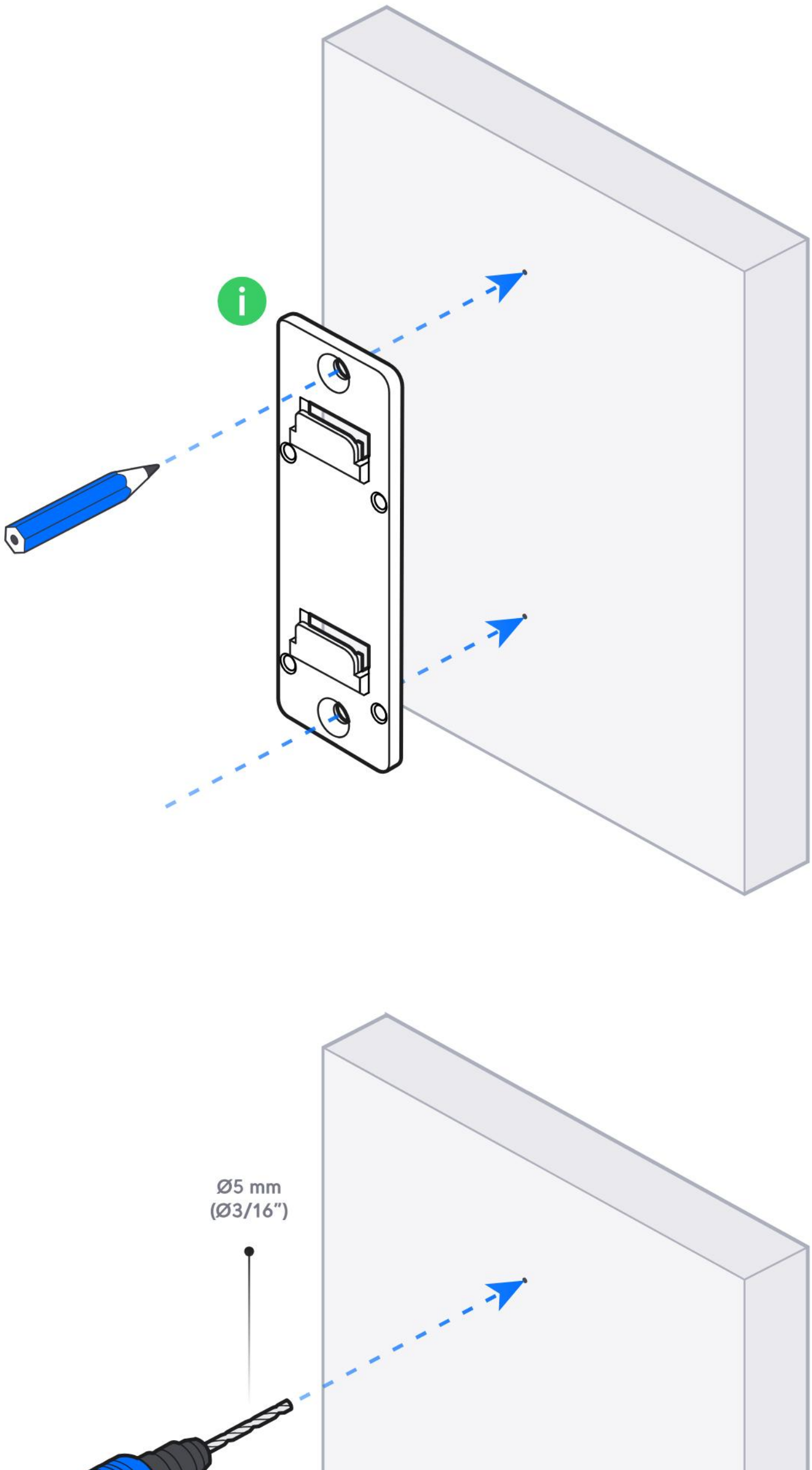

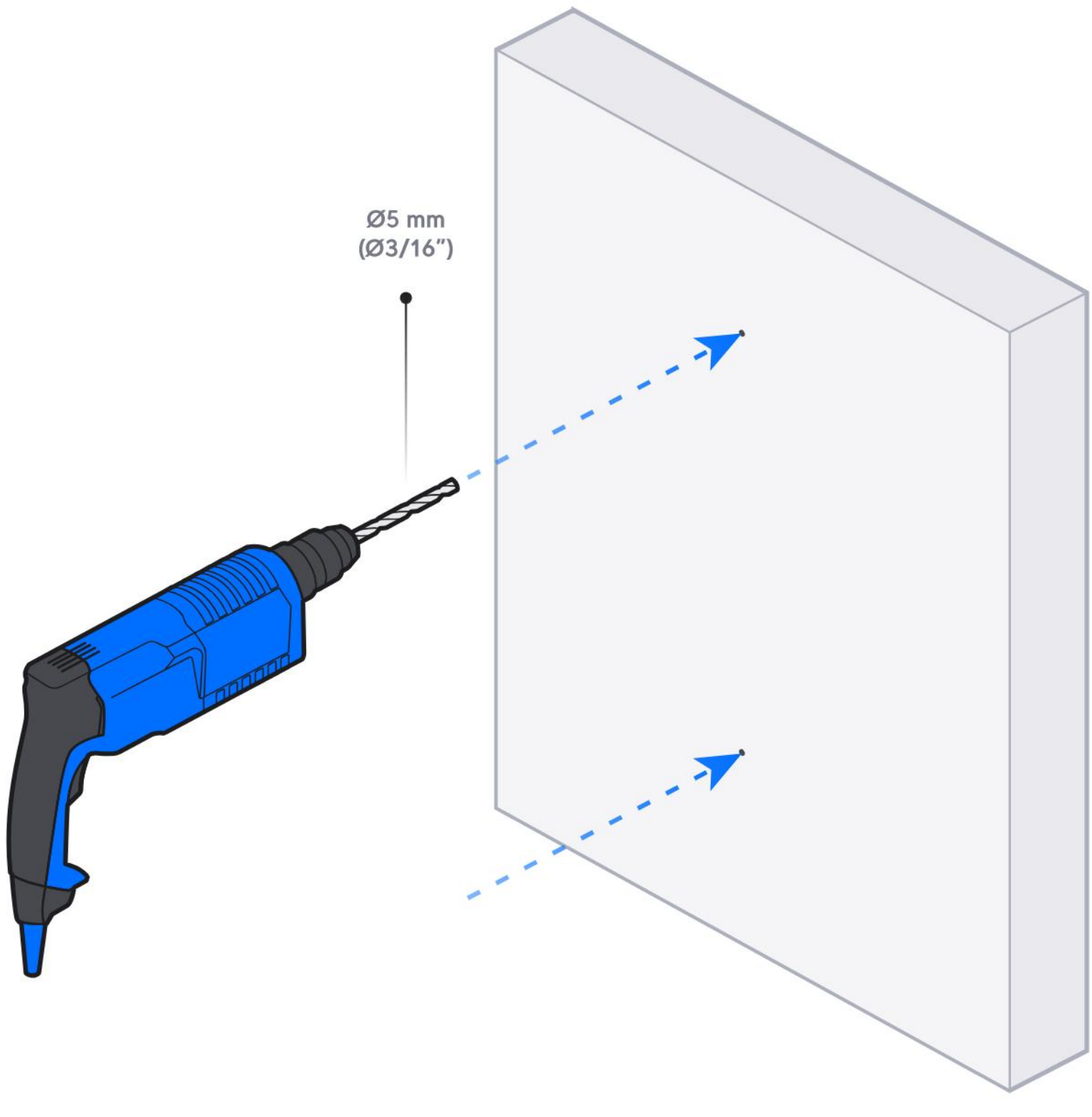
Ø5 mm
(Ø3/16")

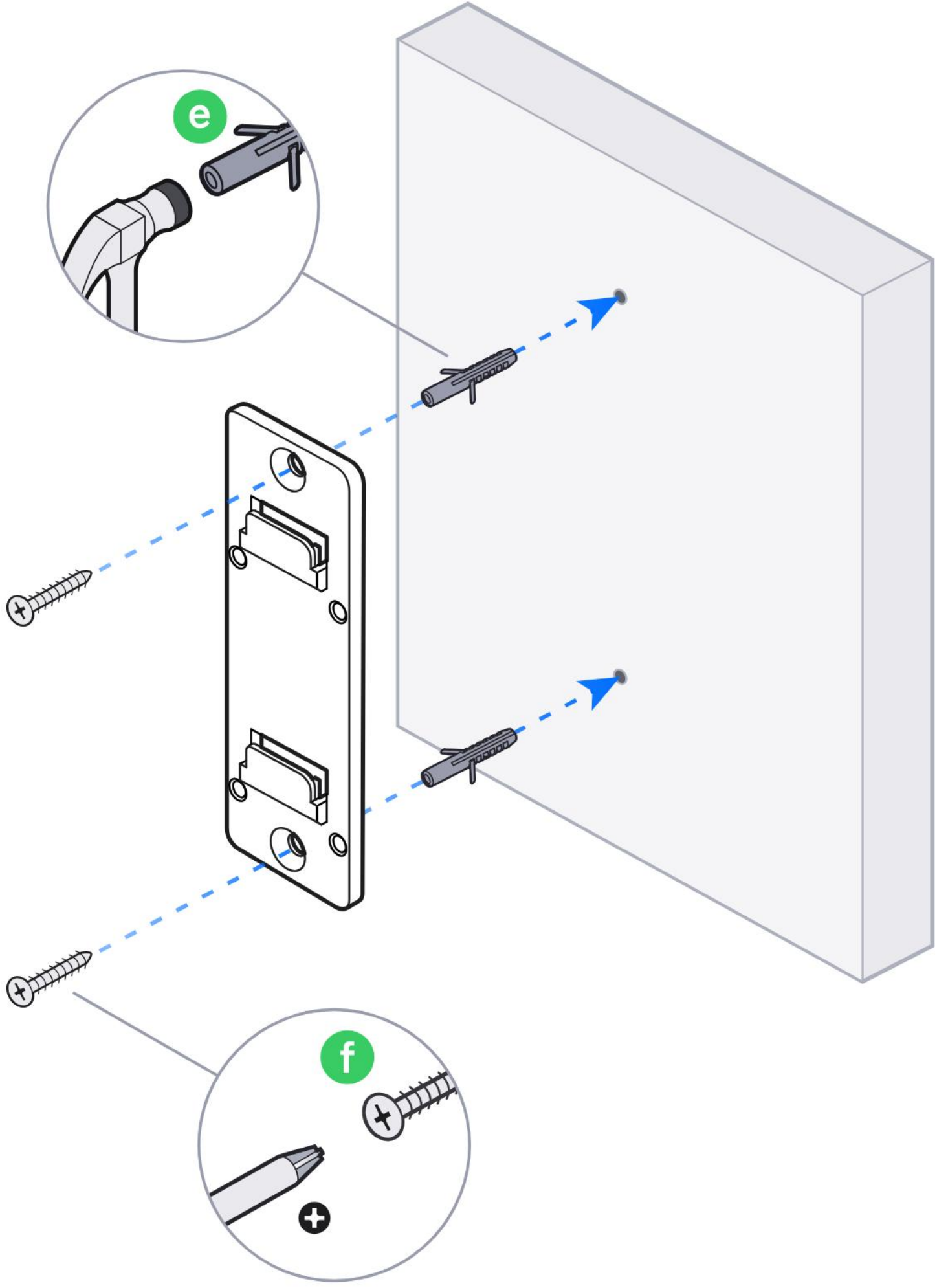

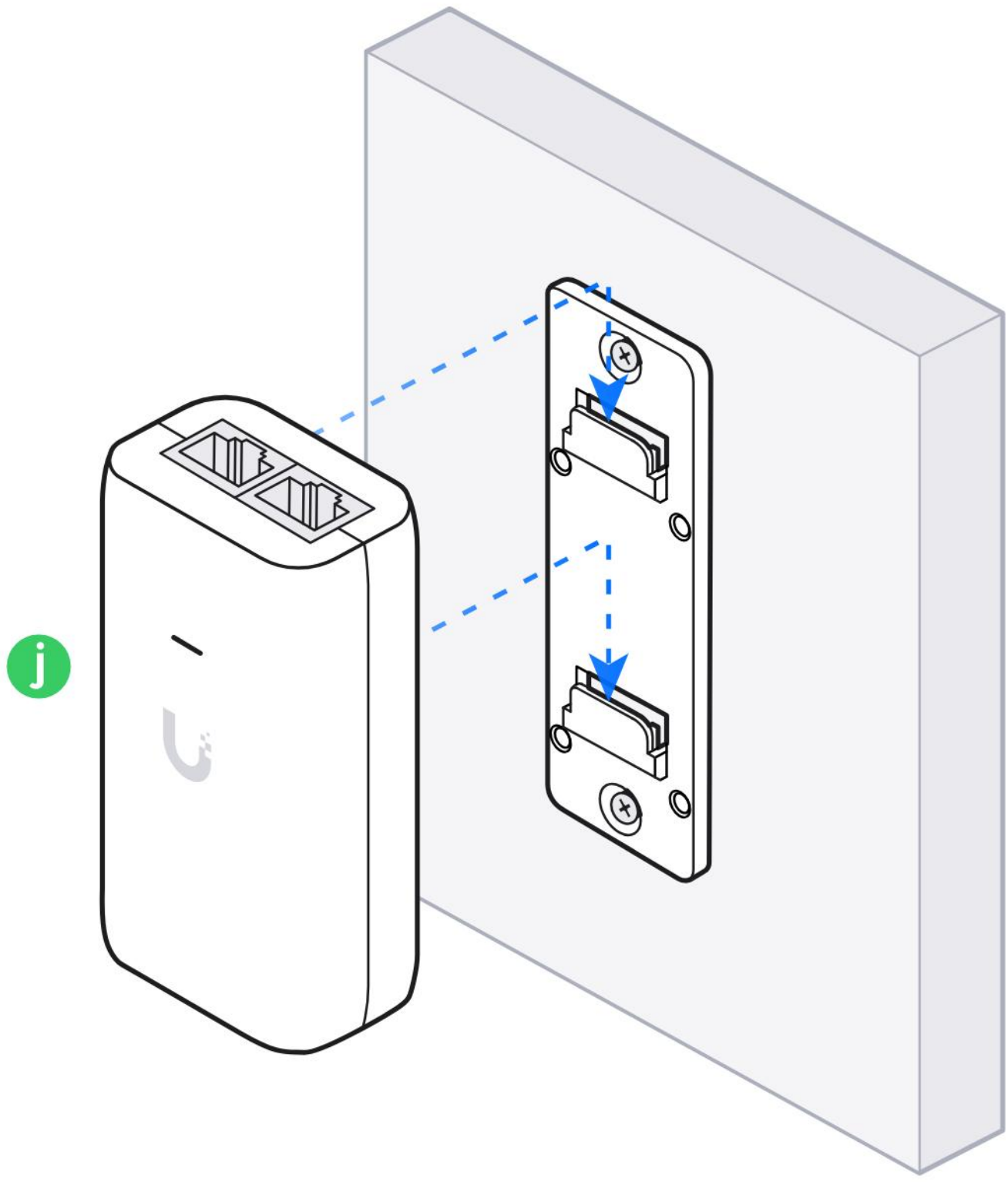

Če potrebujete dodatno pomoč, obiščite Ubiquiti Help Center ali se obrnite na podporo Ubiquiti.

Način B: Stena, kabel skozi steno

Nosilec na steno z vijaki; kabel skozi izvrtino Ø18 mm

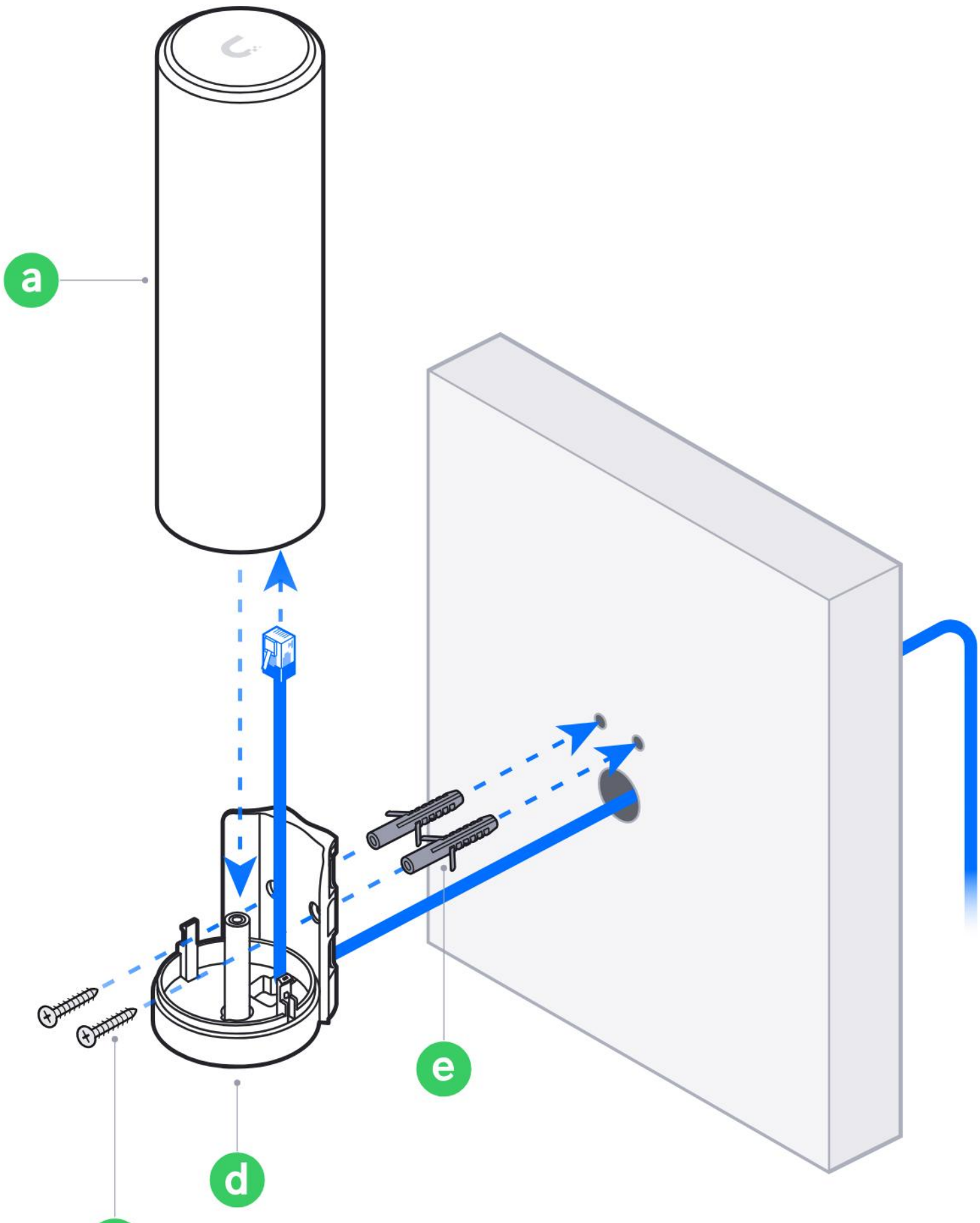

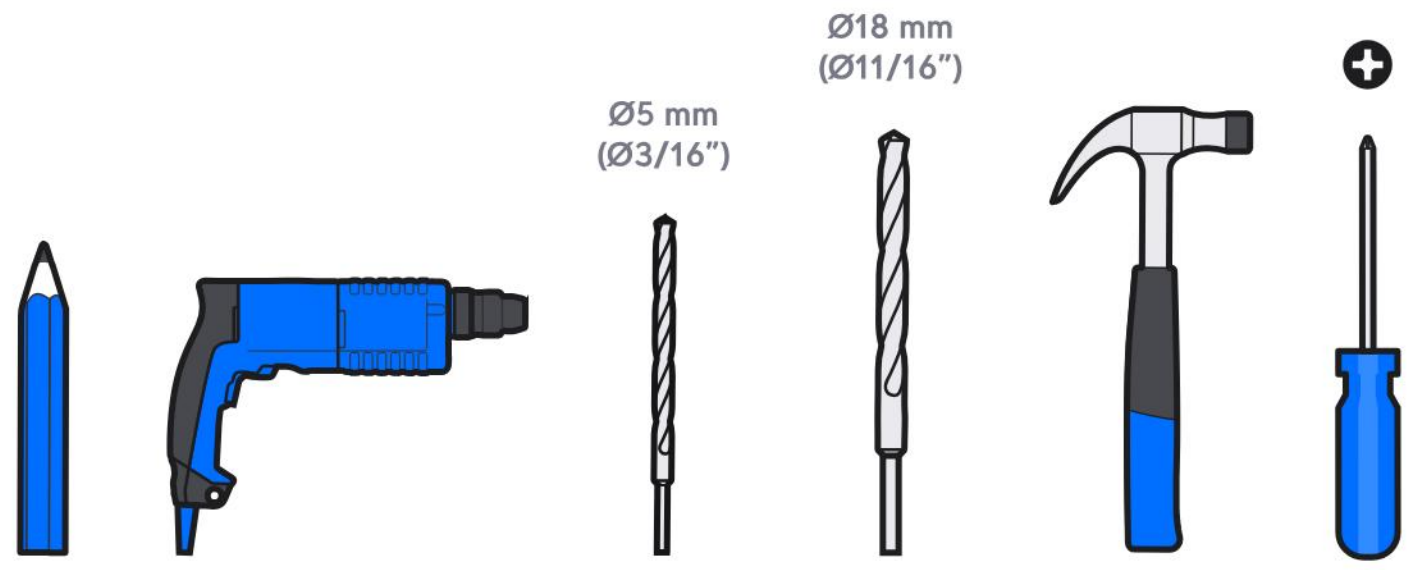

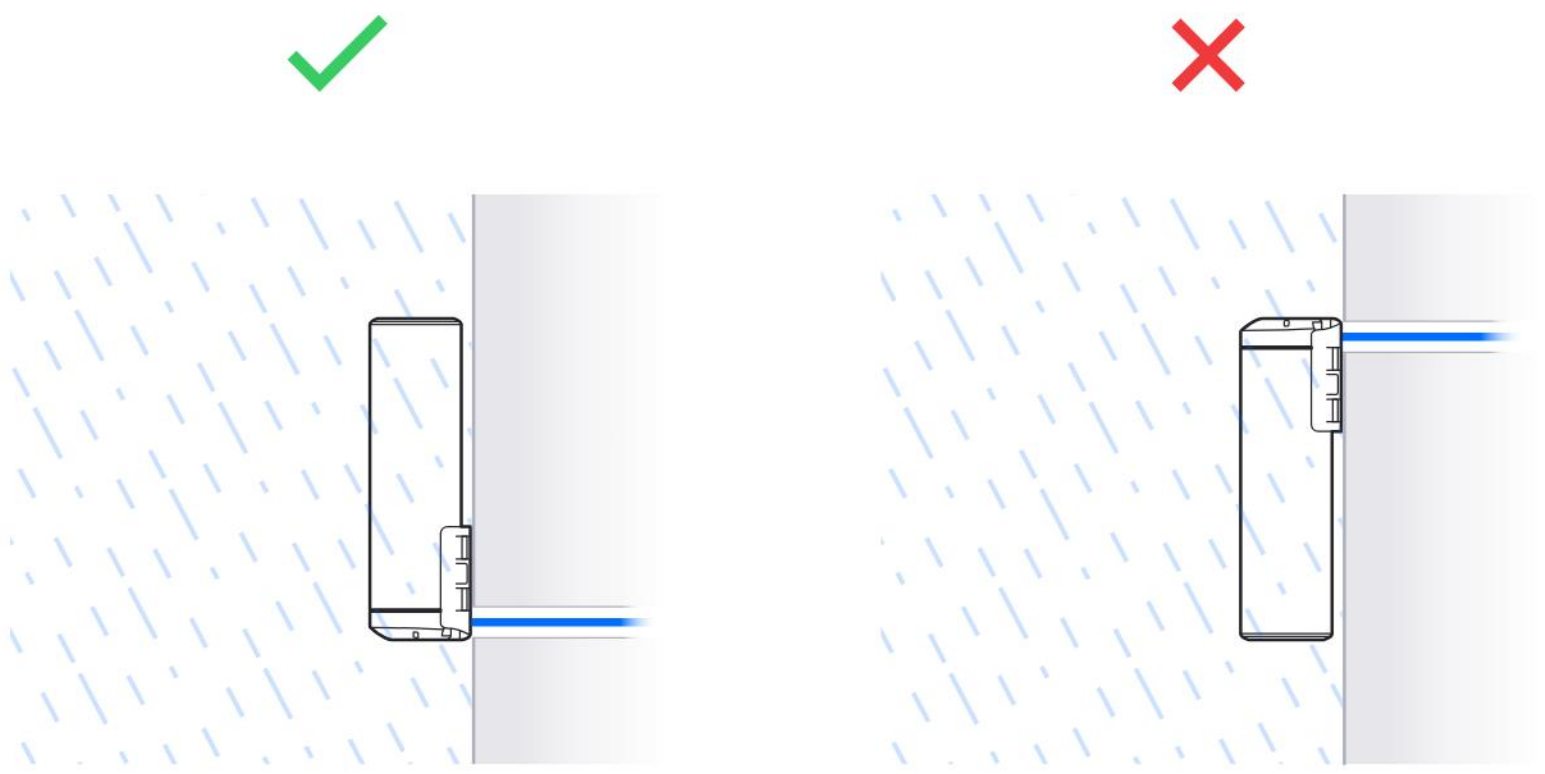

1



1x

C

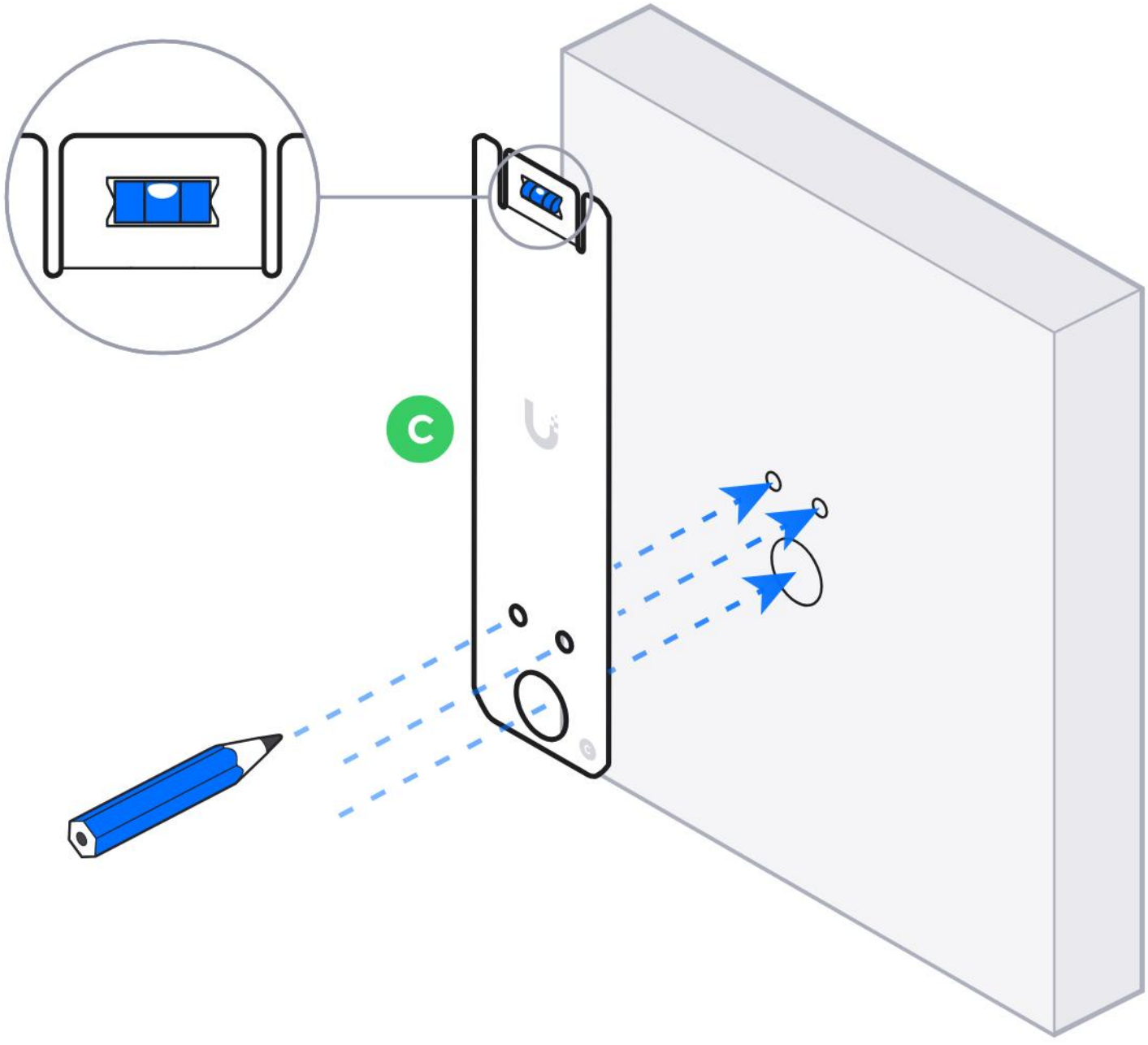

2

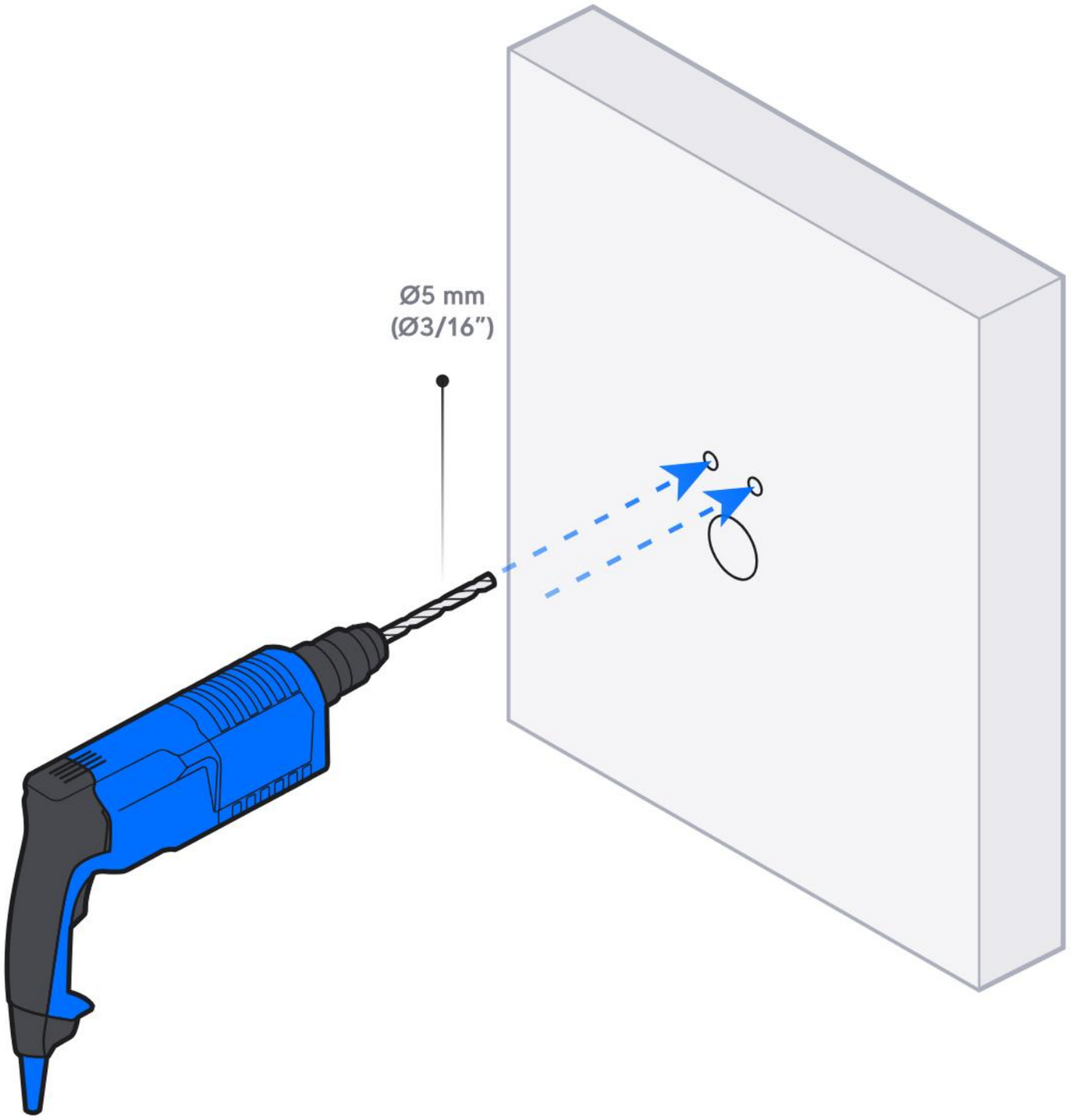

3

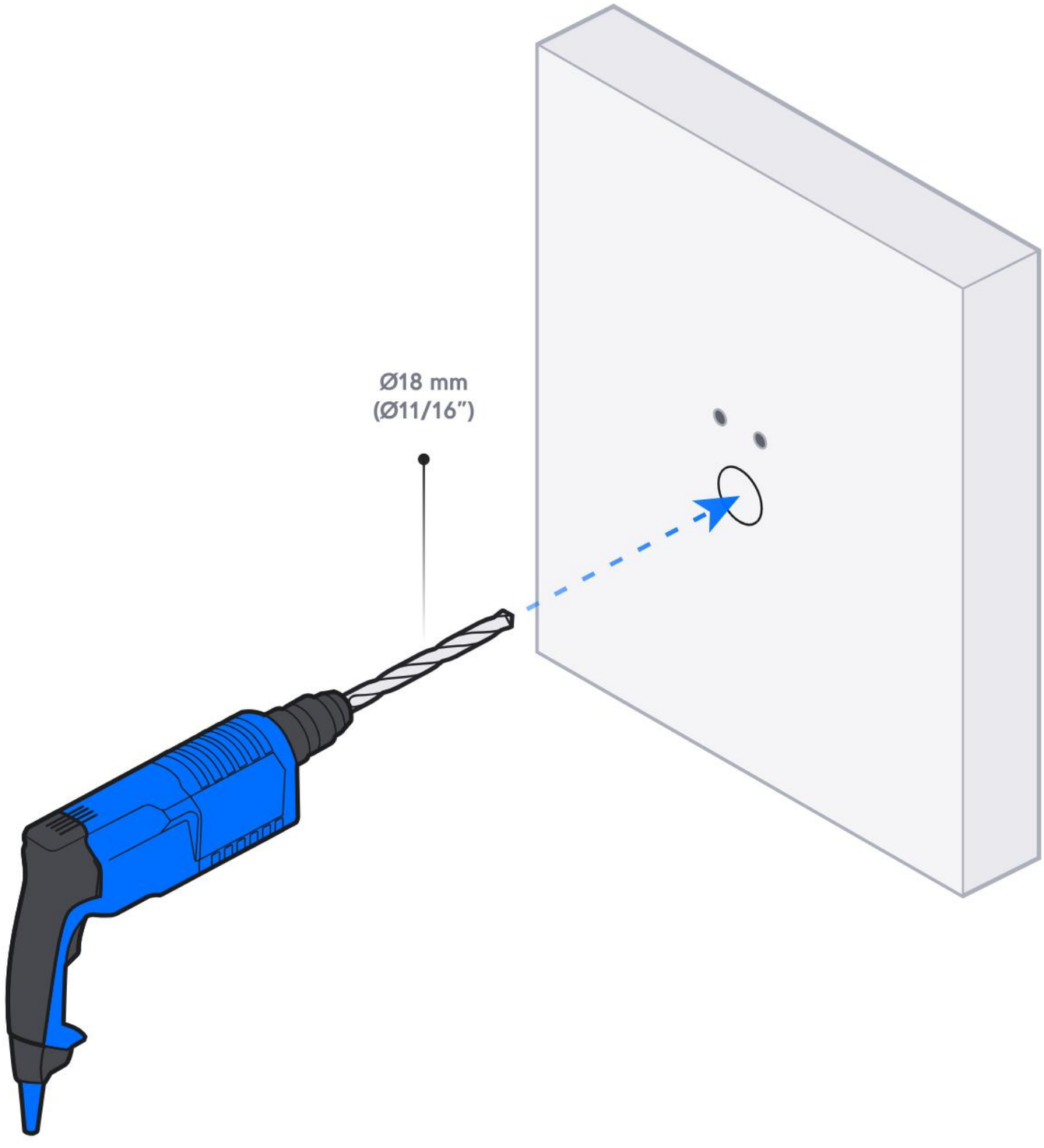

4

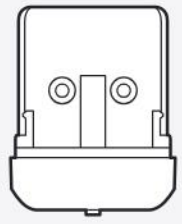

1x

d

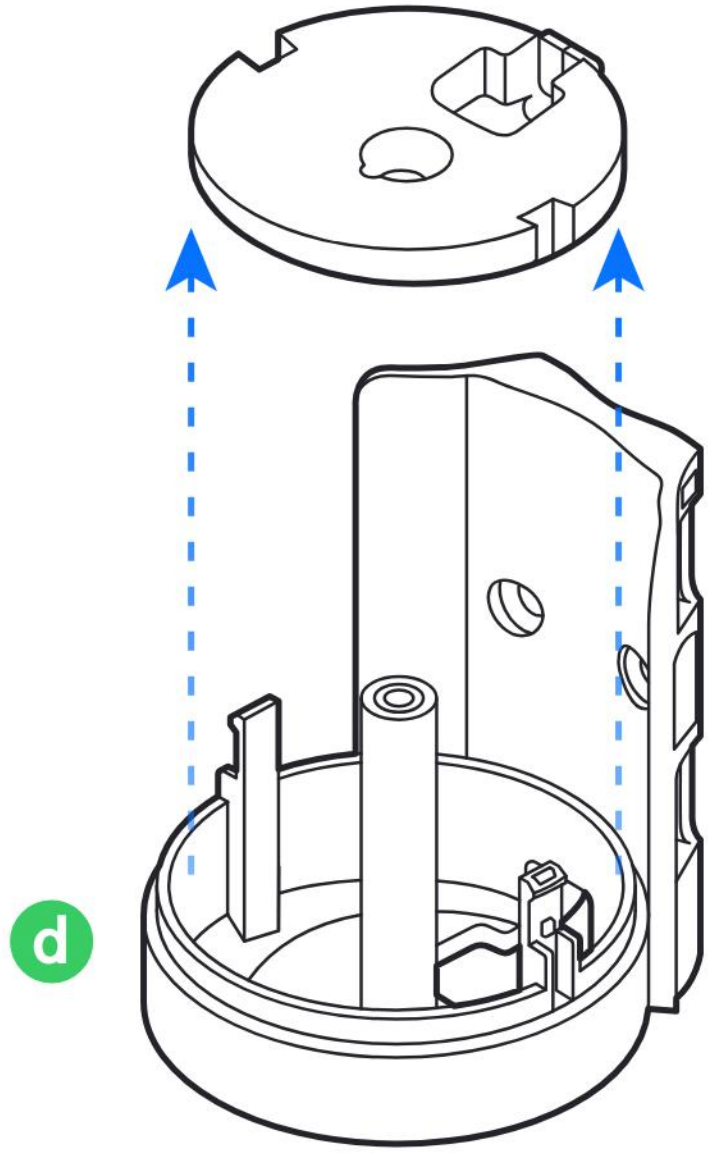

5

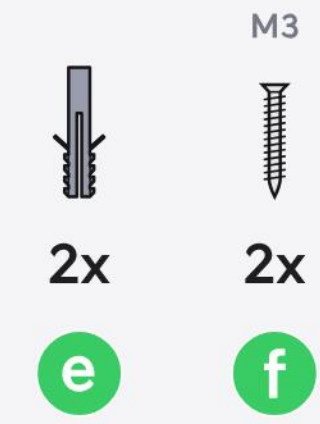

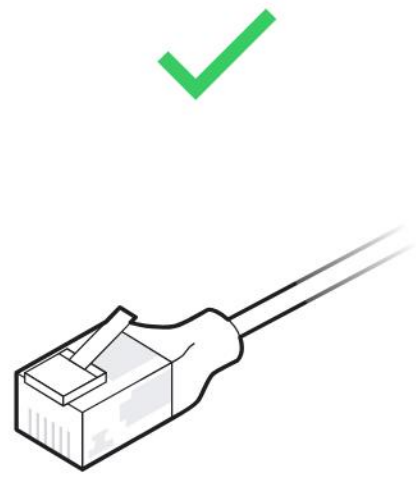

UniFi Etherlighting Patch Cable

Buy ›

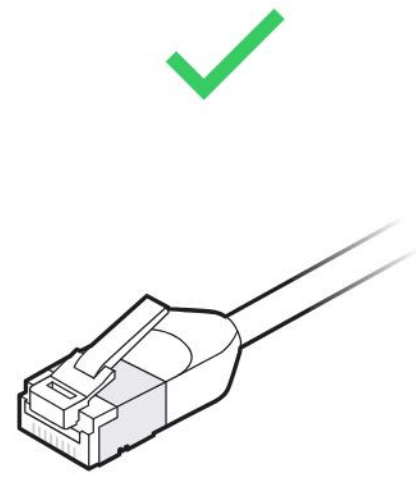

UniFi Premium Patch Cable Outdoor

Buy ›

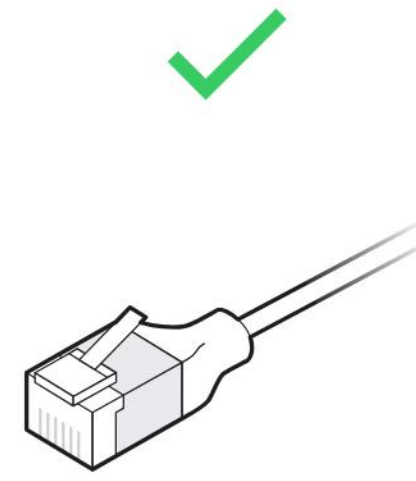

UniFi Premium Patch Cable

Buy ›

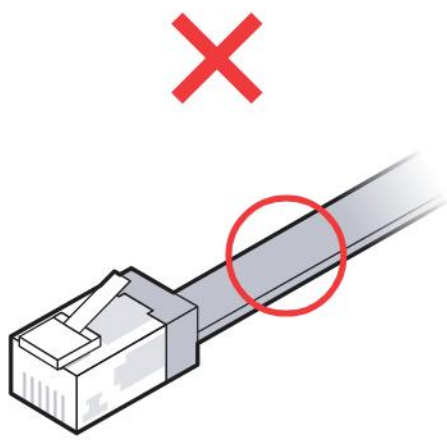

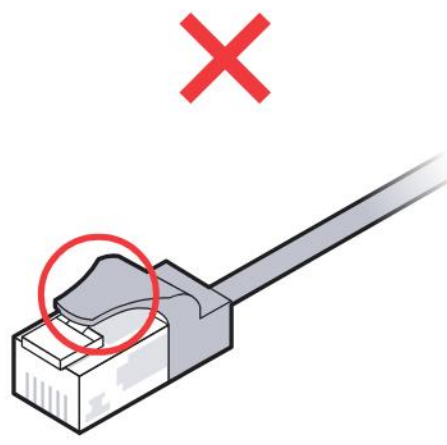

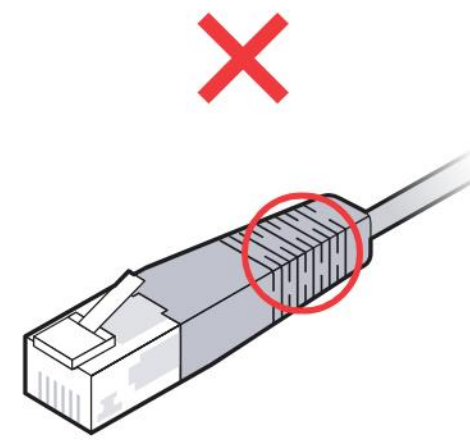

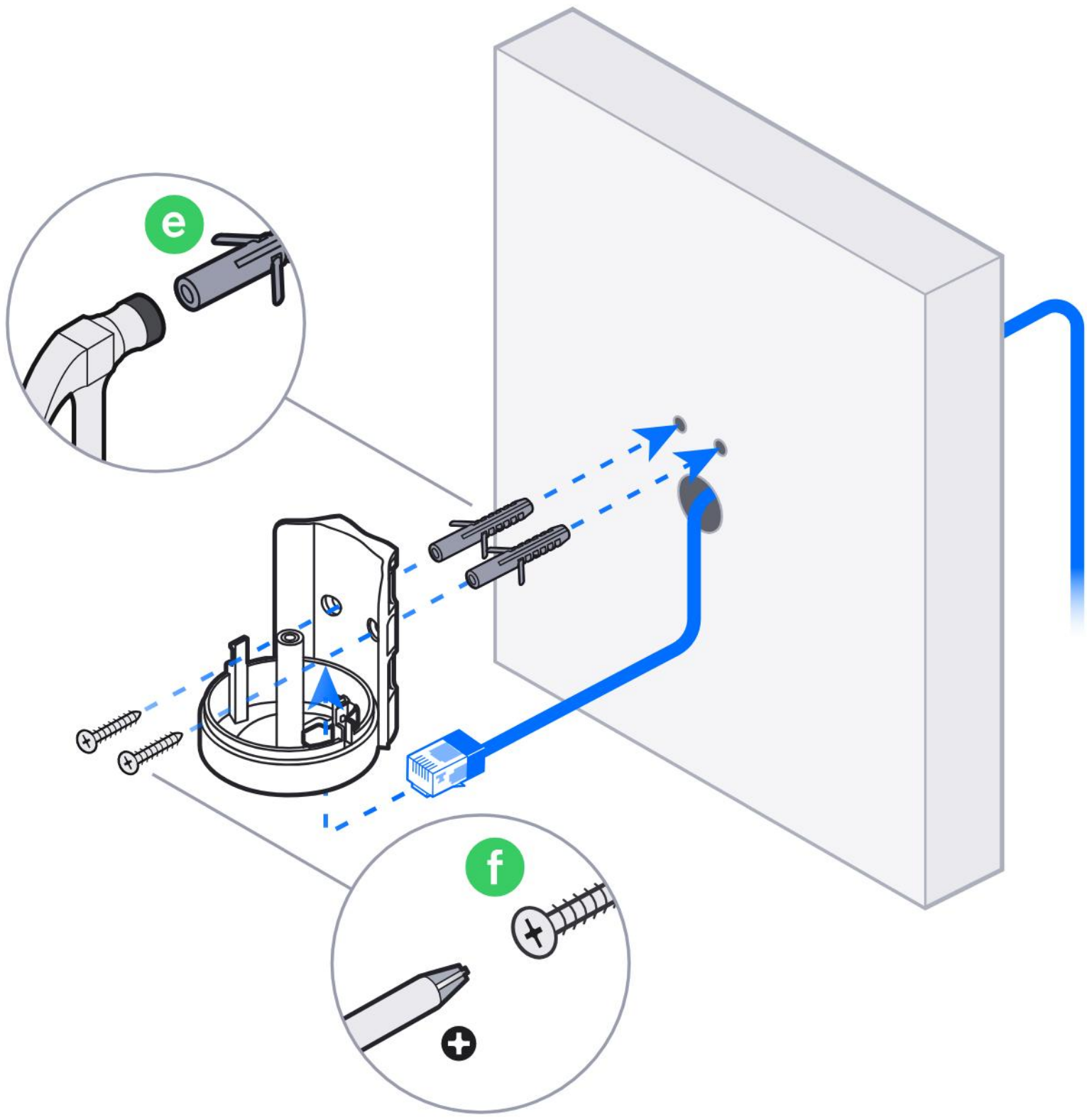

6

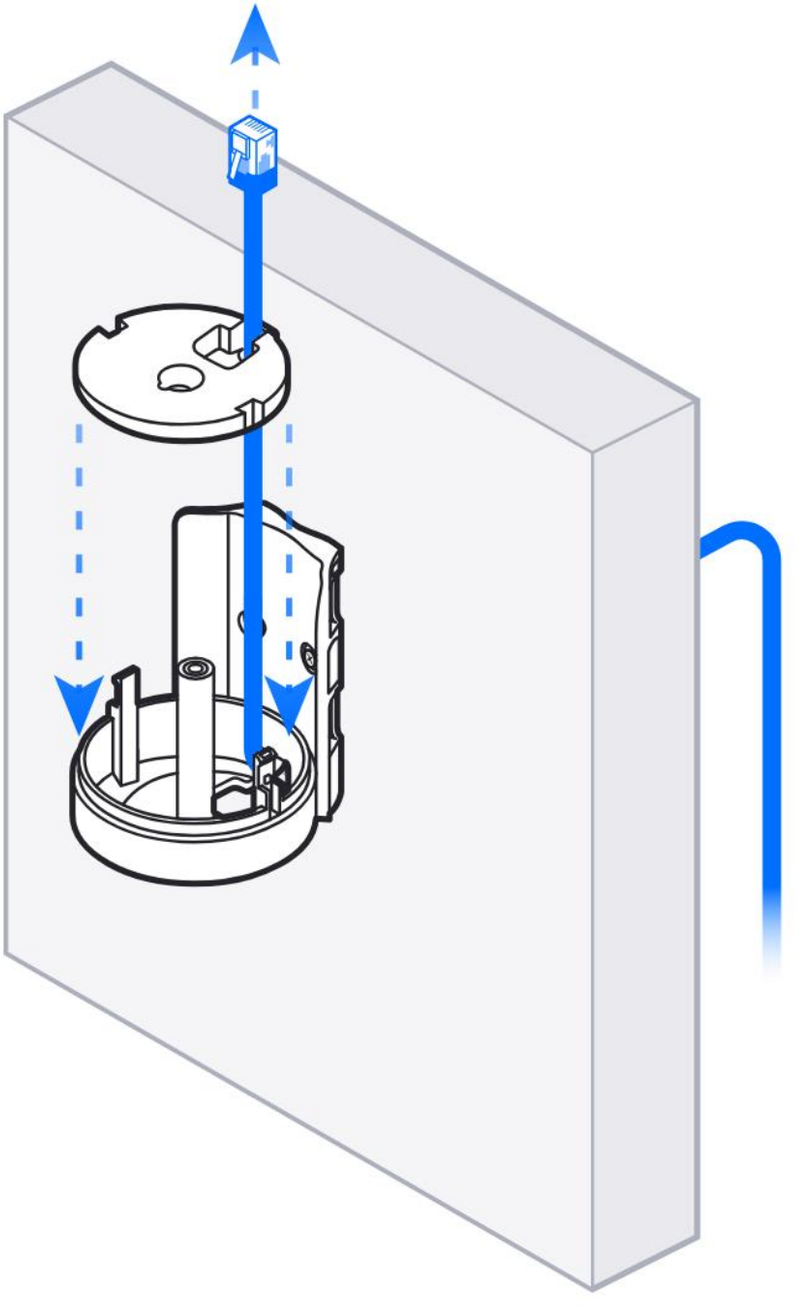

7



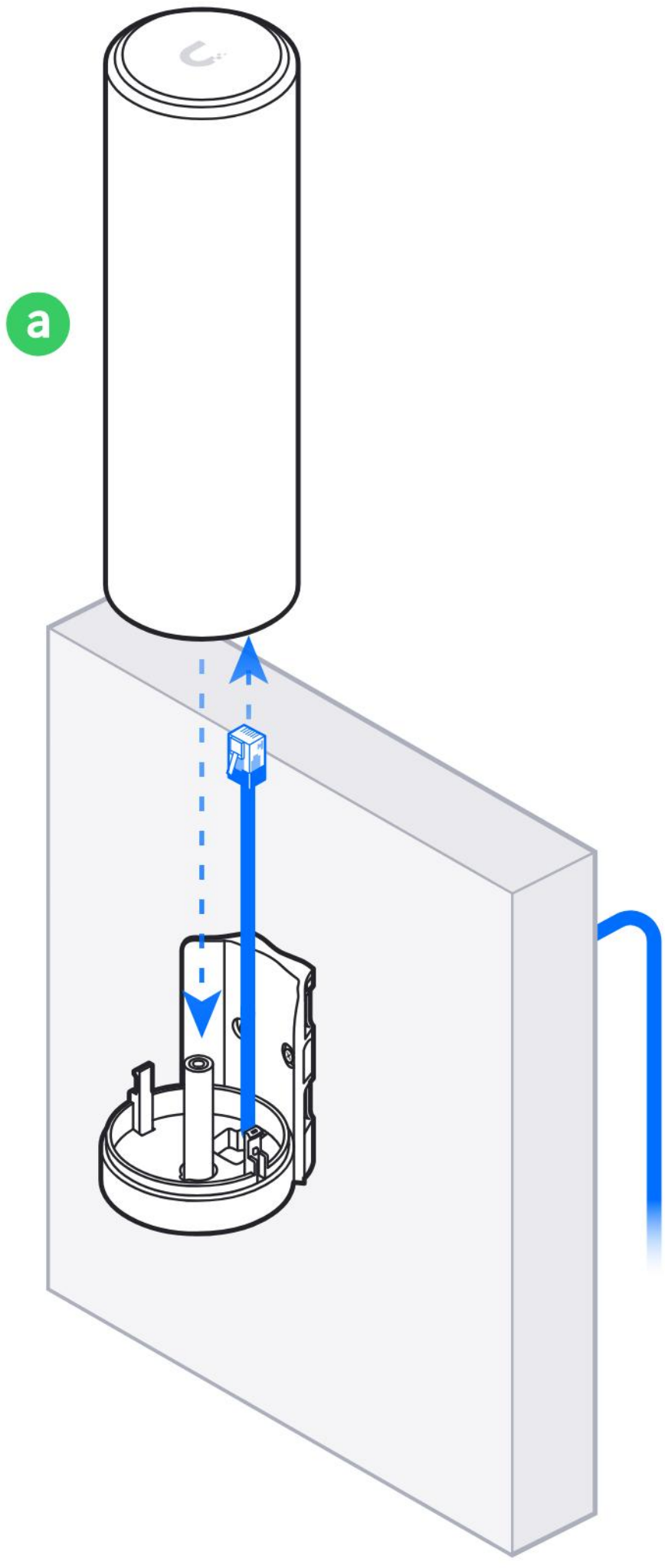

8

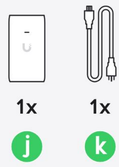
1x
1x
j
k

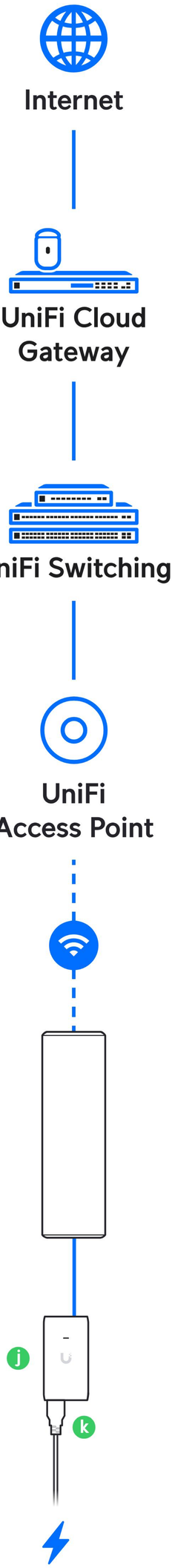
Internet
UniFi Cloud Gateway
UniFi Switching
UniFi Access Point
j
k

9

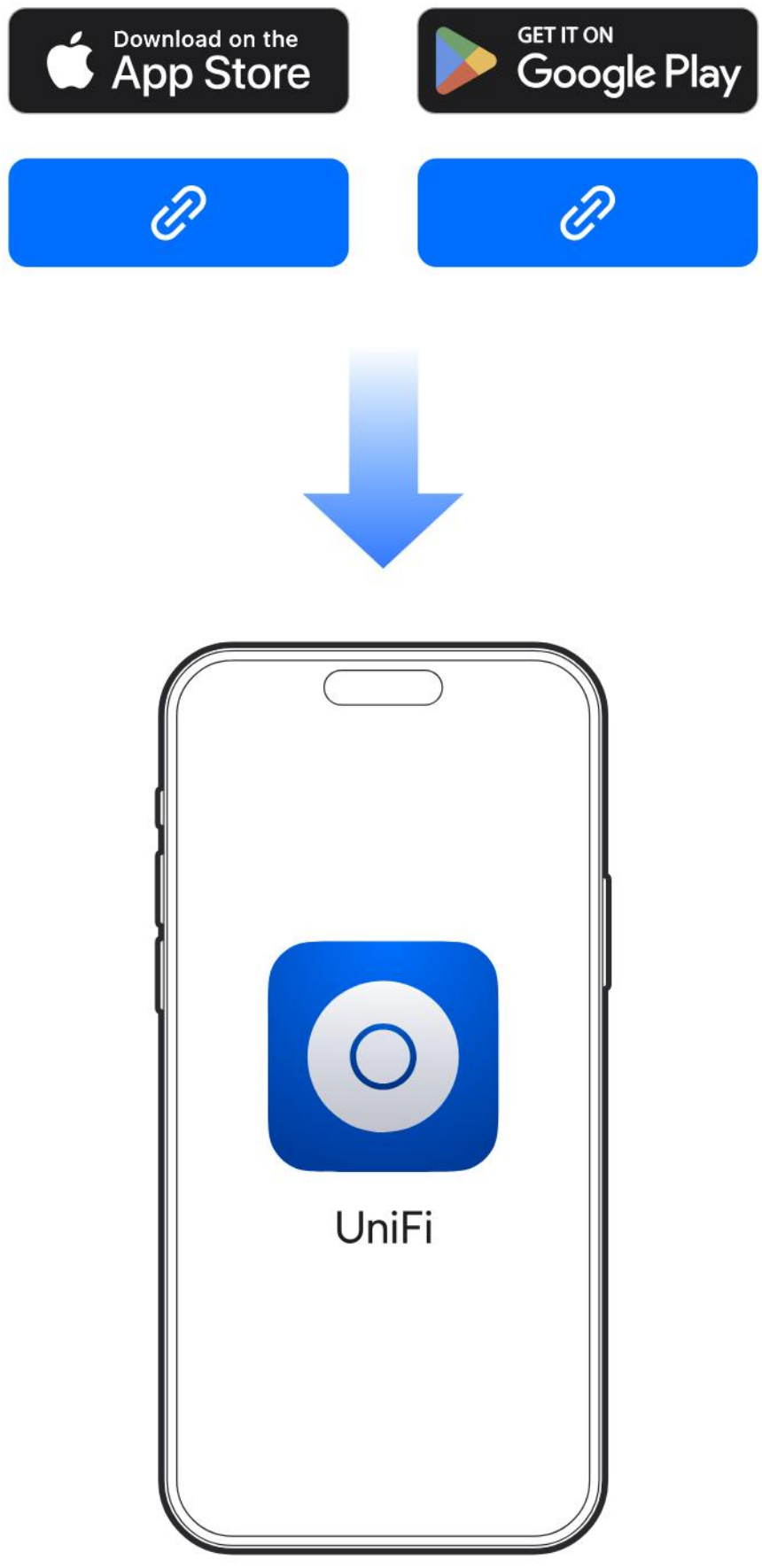

10

Point the U7 Mesh U logos toward each other for the best mesh signal.

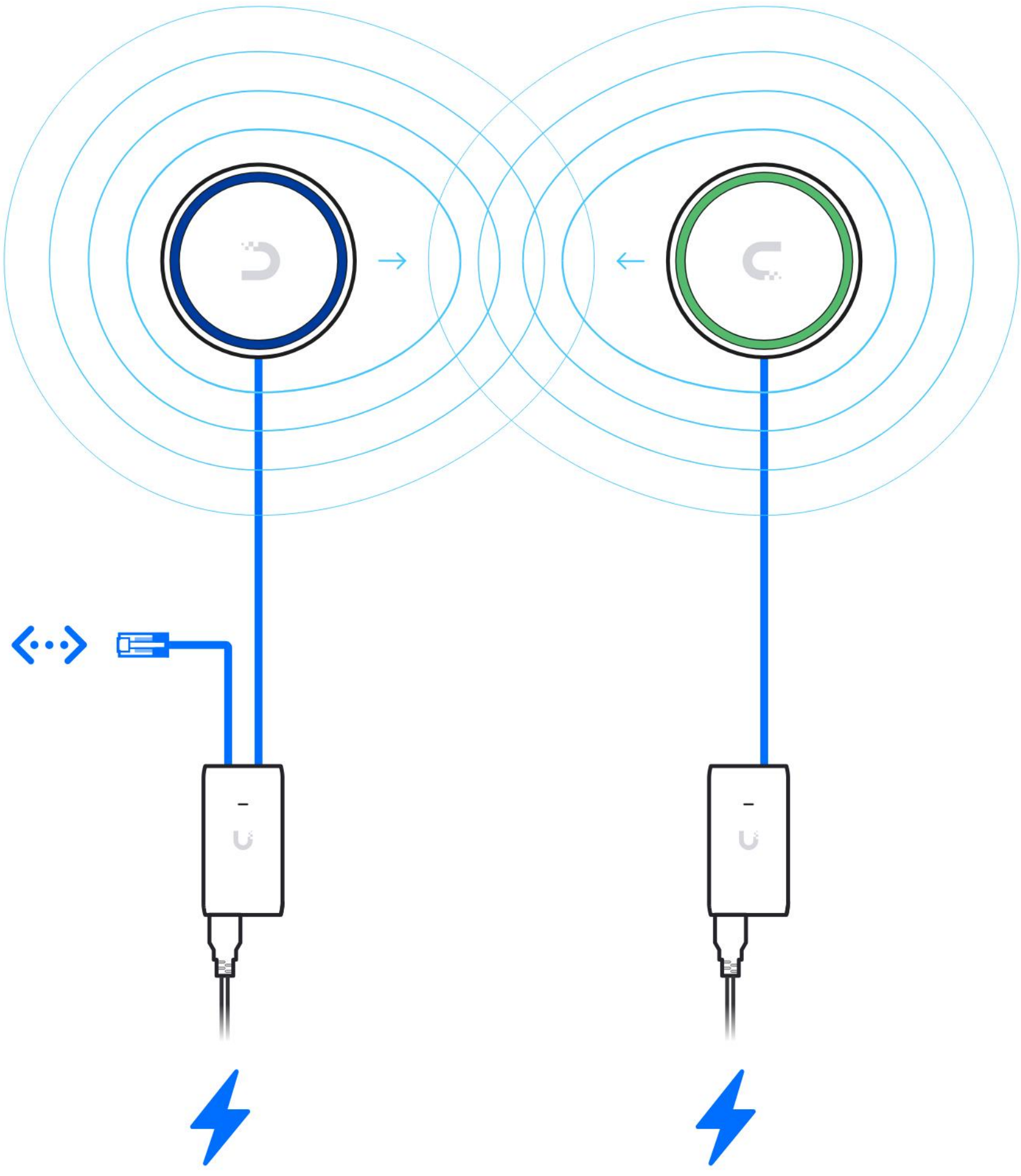

Check the LED ring to find the strongest mesh signal.

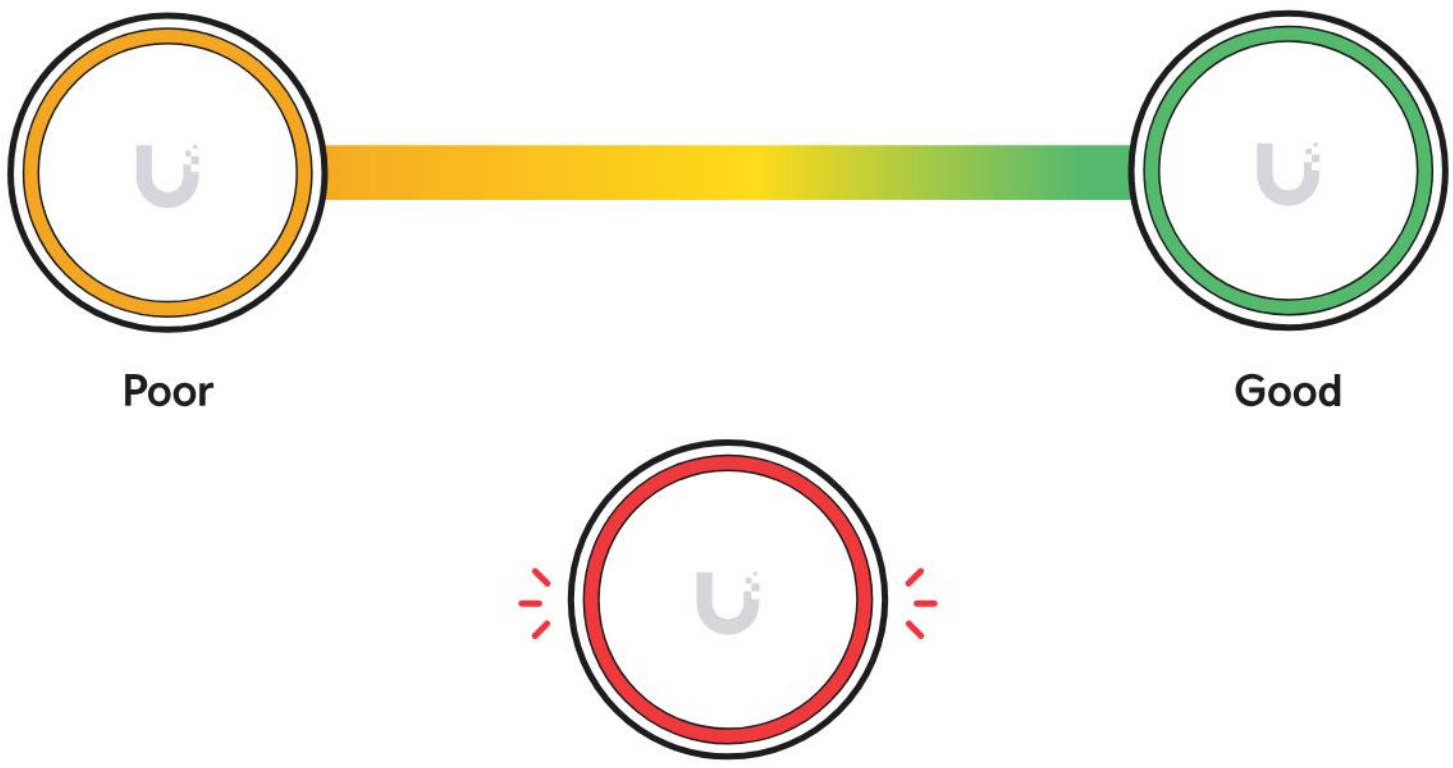

11



1x

h

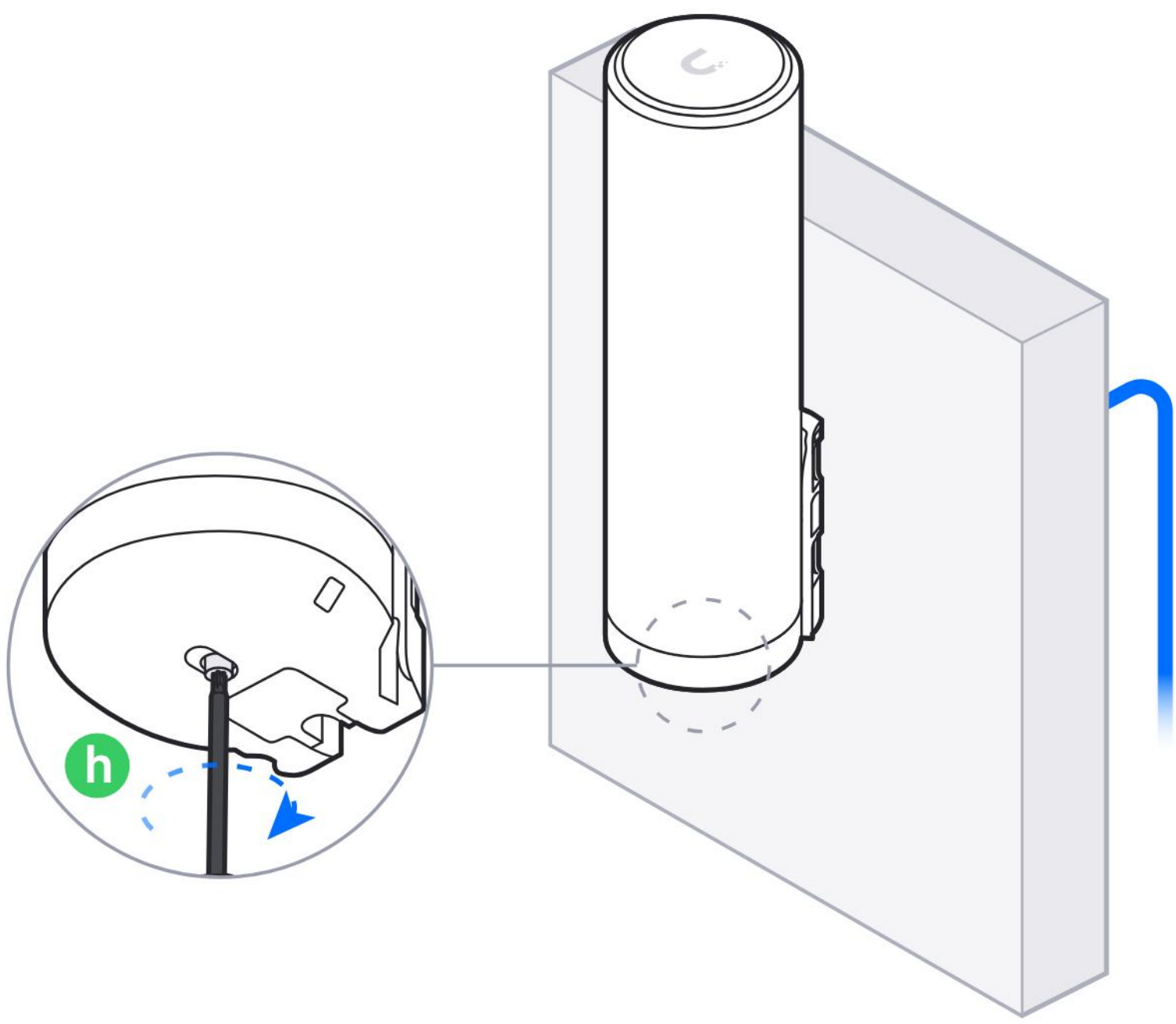

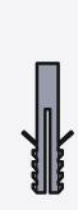

2x

e

M3



2x

f



1x

i



1x

j

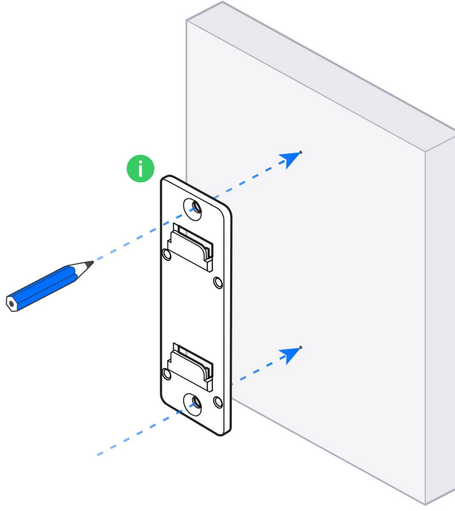
i

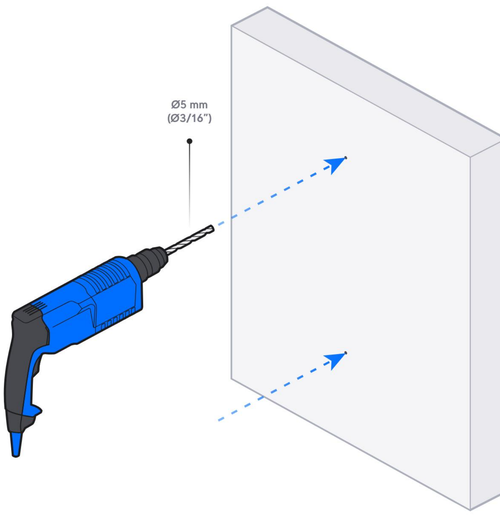
Ø5 mm
(Ø3/16")

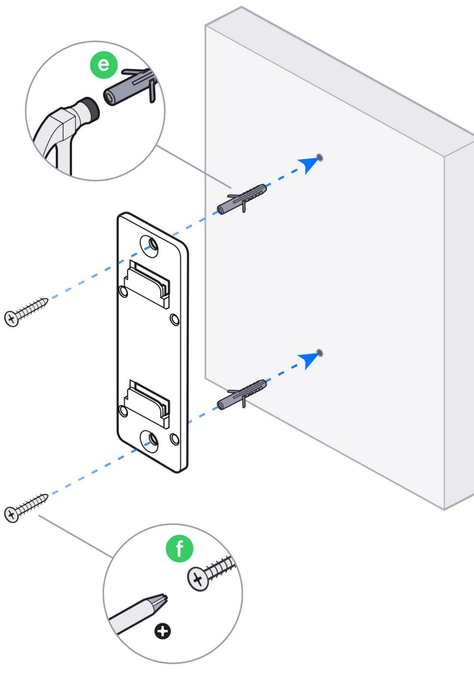
e
f

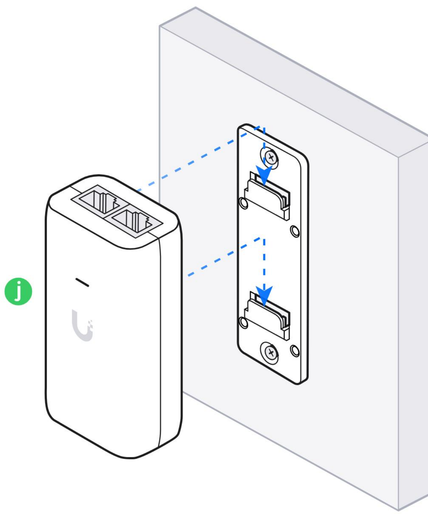
j

Način C: Stena, kabel po steni

Nosilec na steno z vijaki; kabel po površini stene

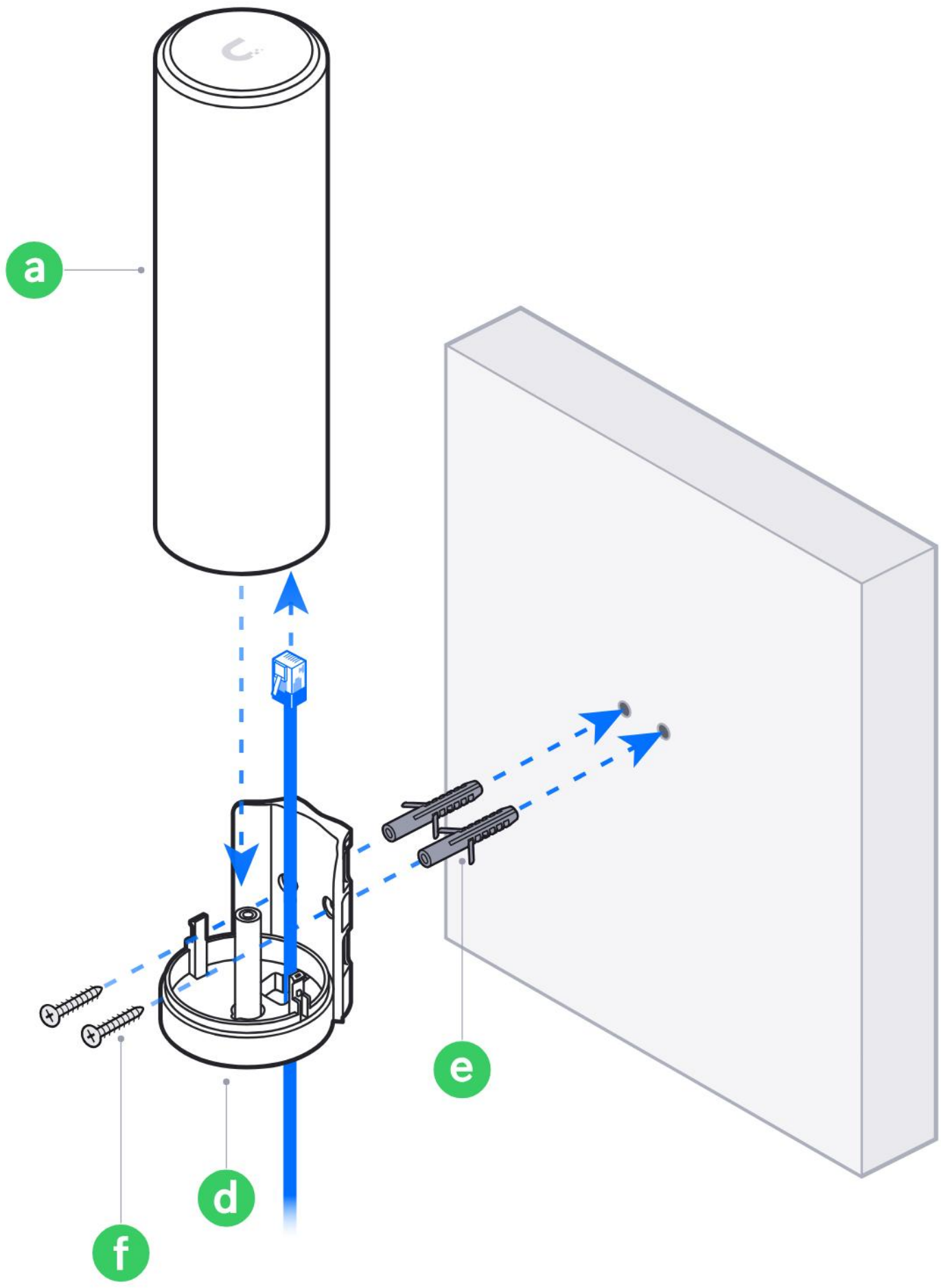

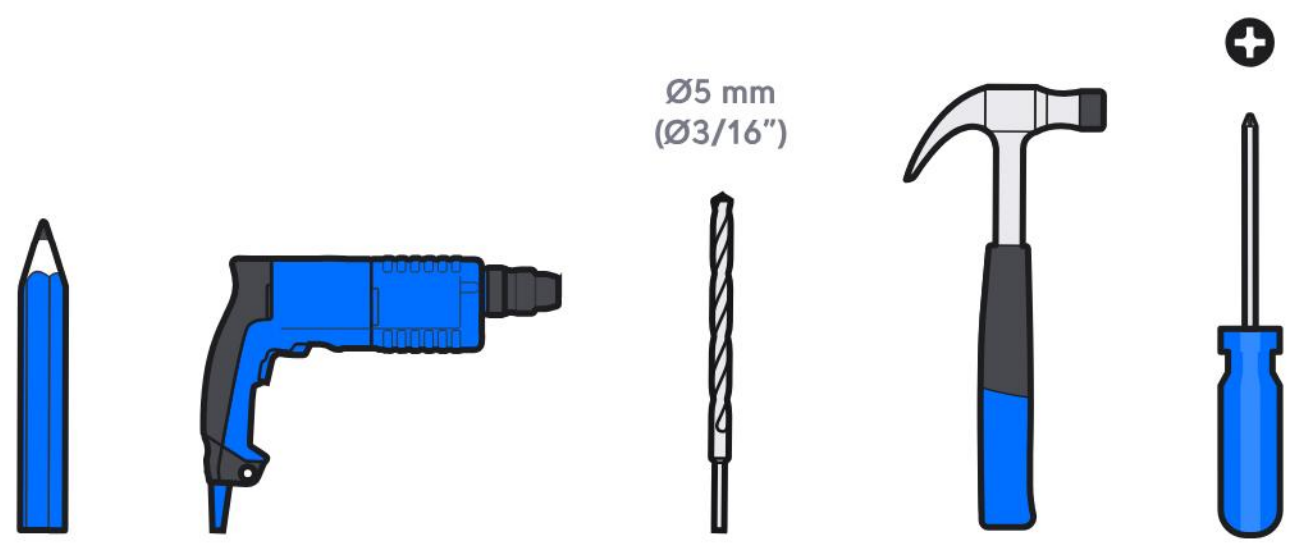

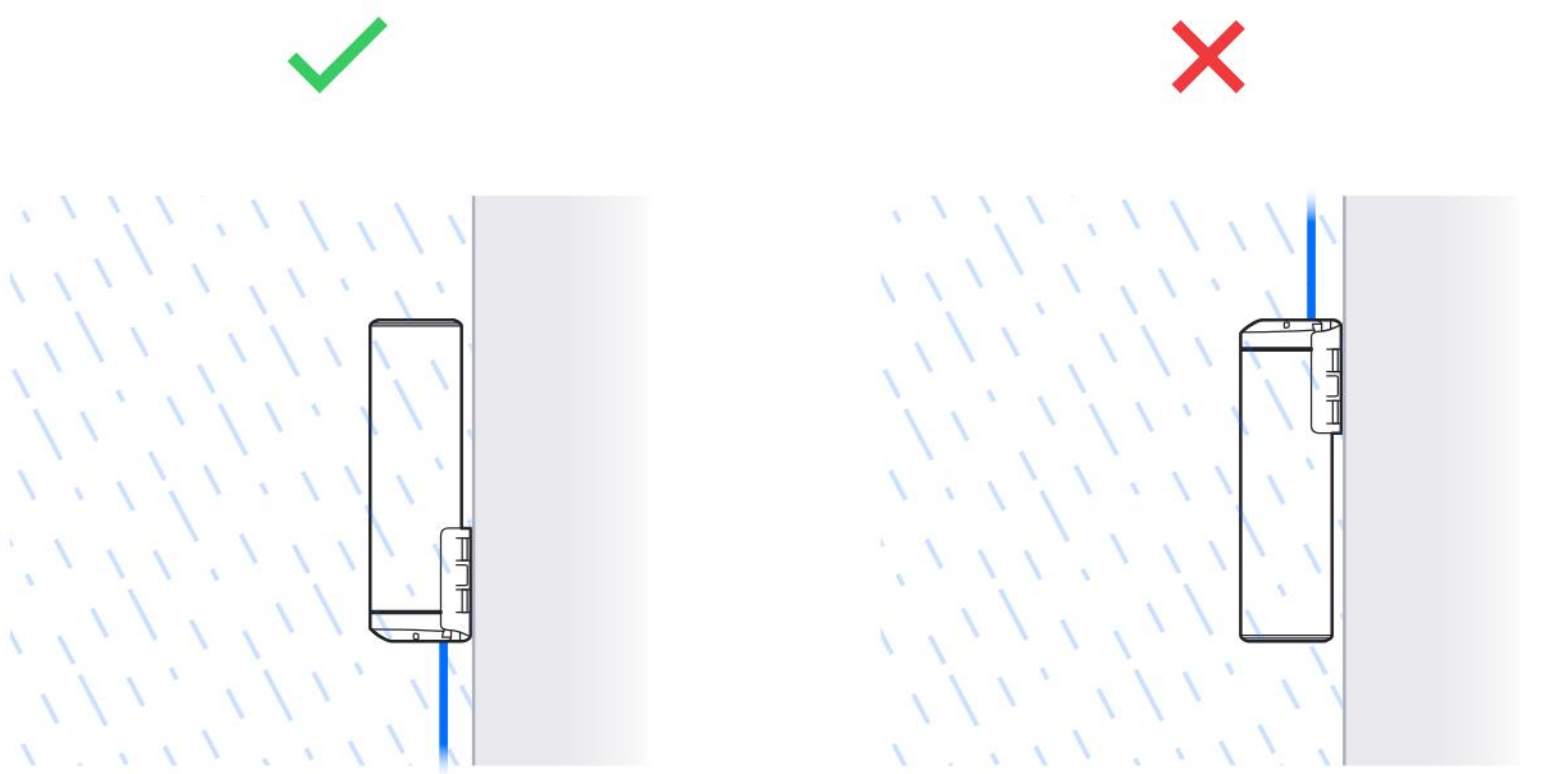

1



1x

C

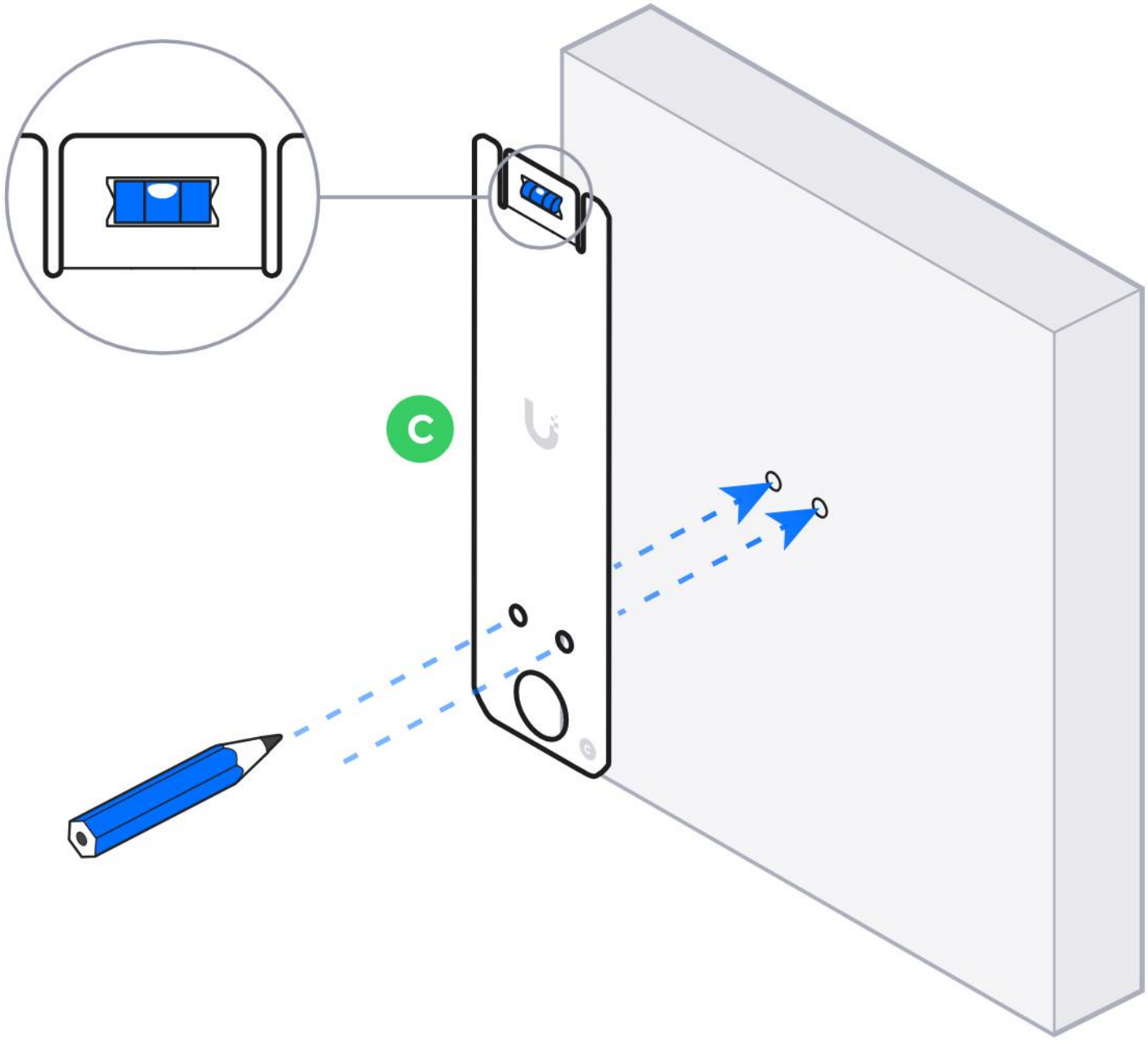

2

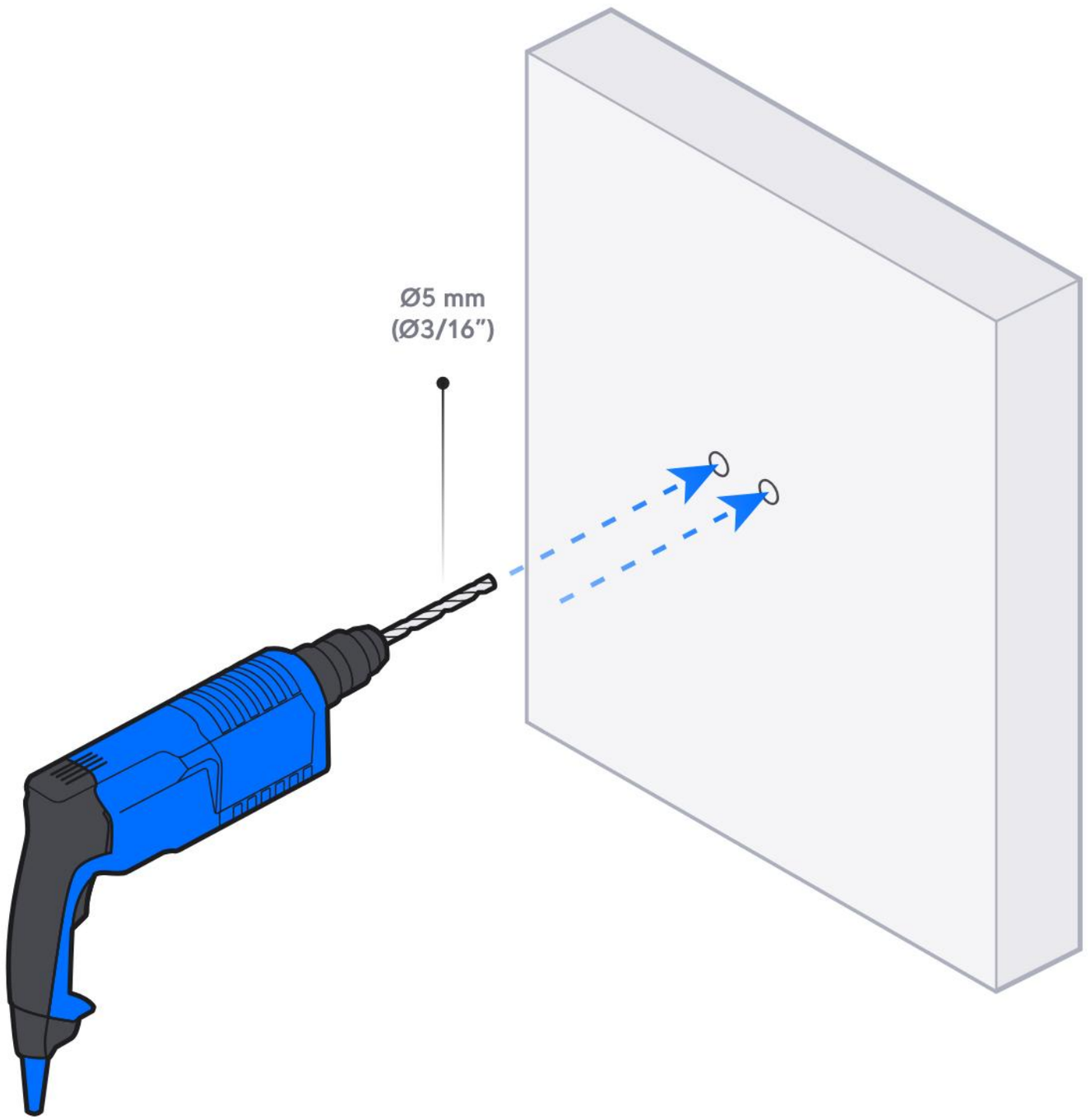

3

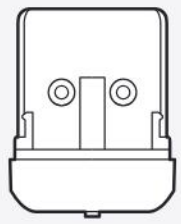

1x

d

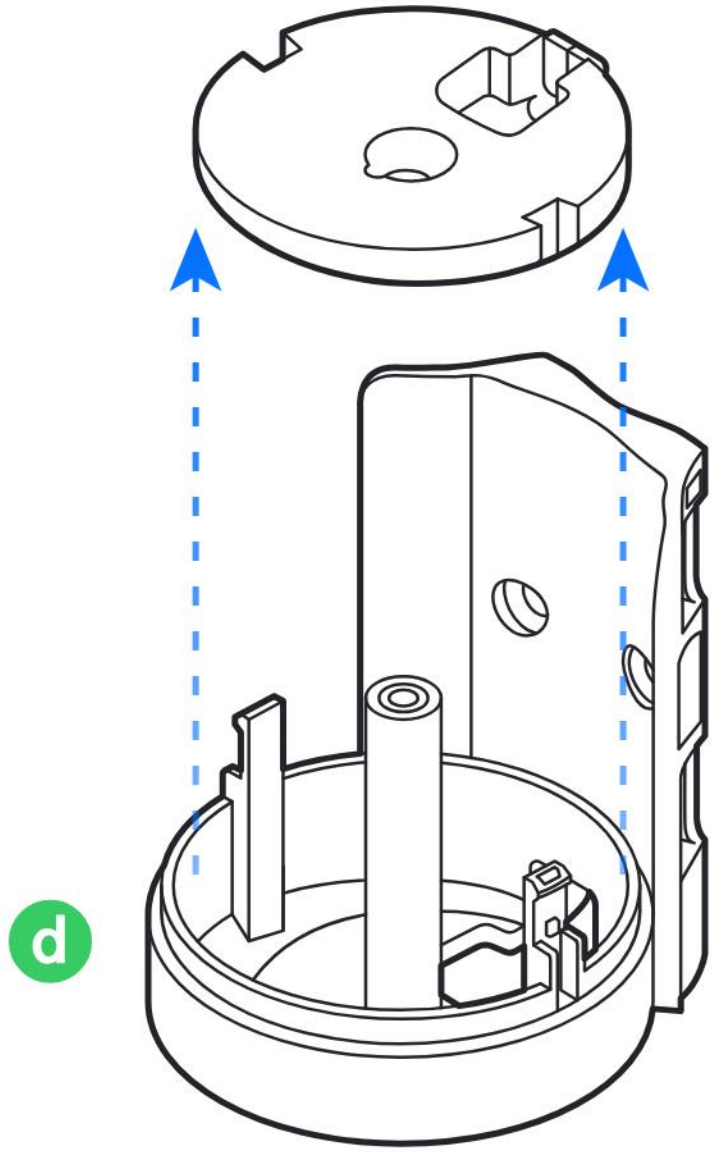

4

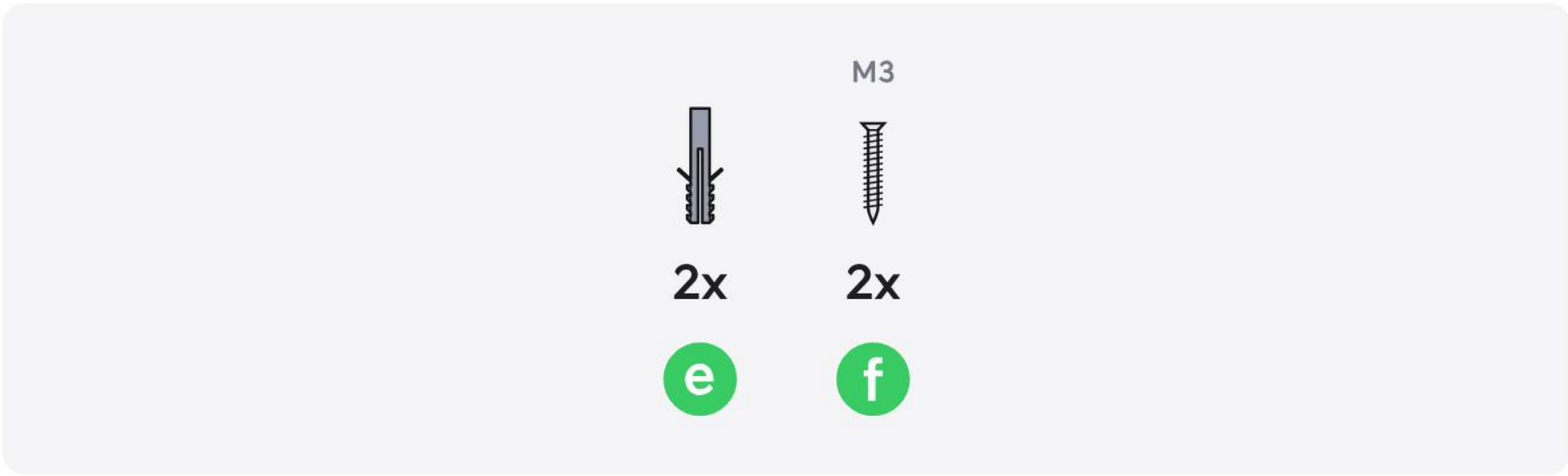

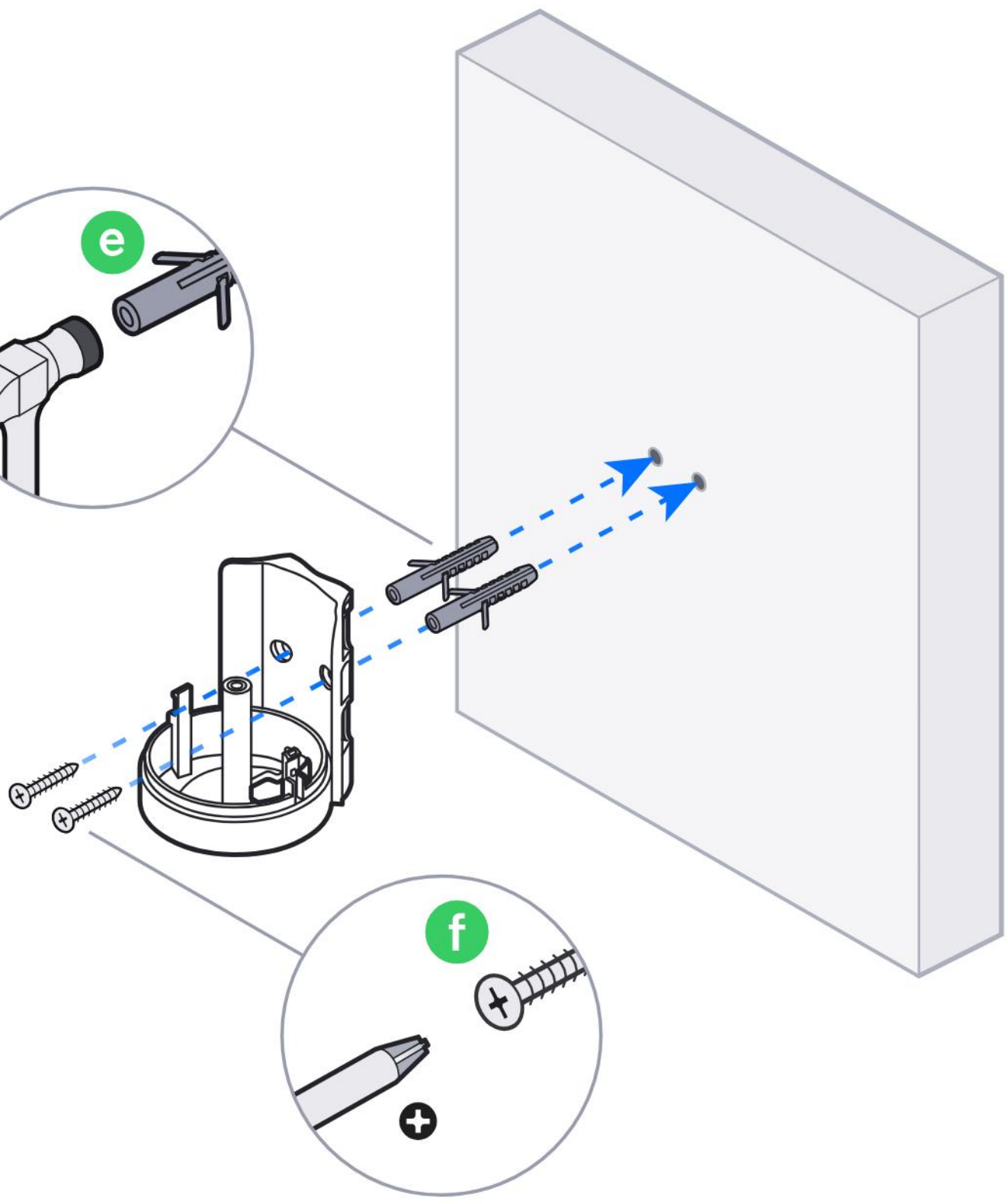

5

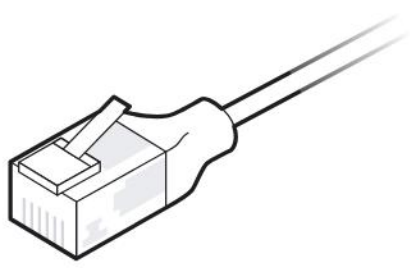

UniFi Etherlighting Patch Cable

Buy ›

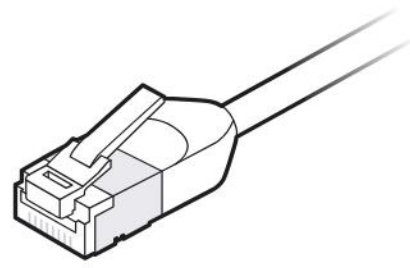

UniFi Premium Patch Cable Outdoor

Buy ›

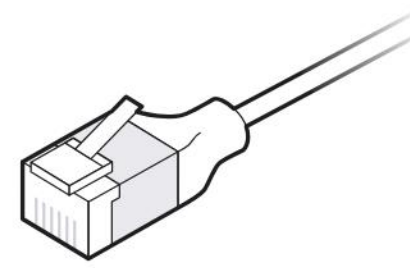

UniFi Premium Patch Cable

Buy ›

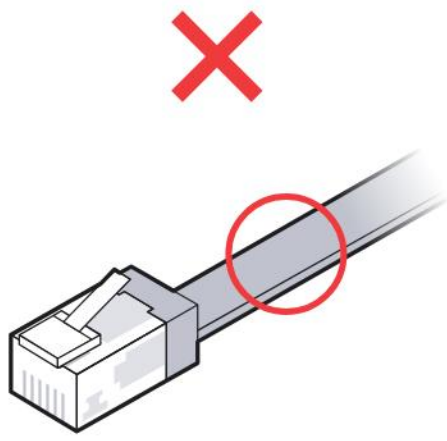

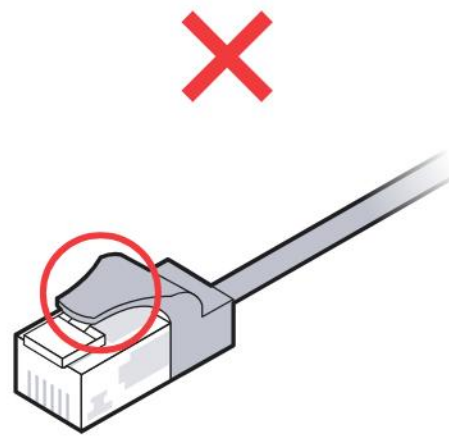

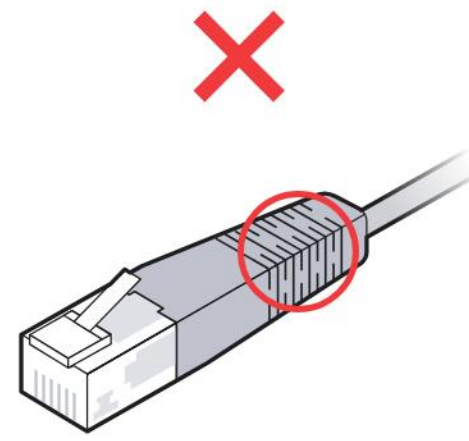

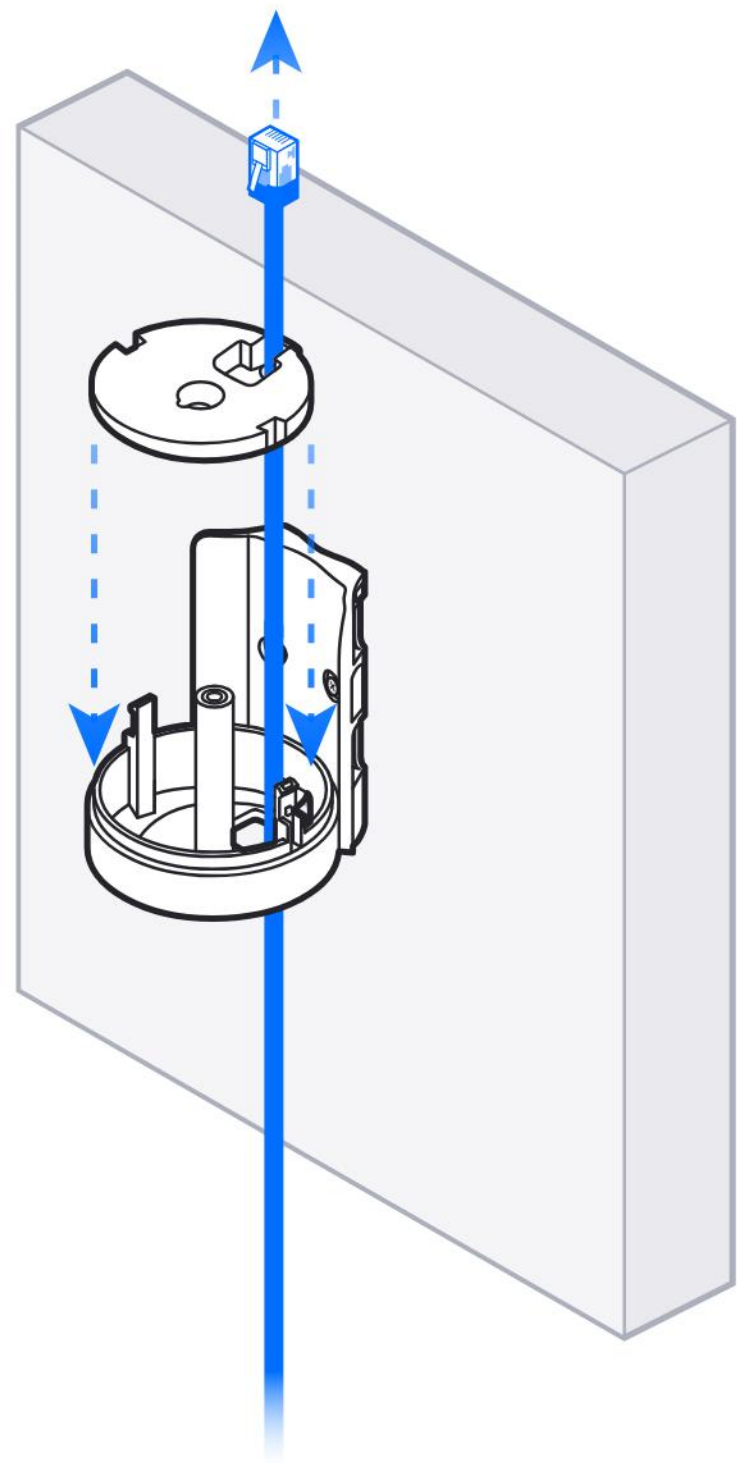

6

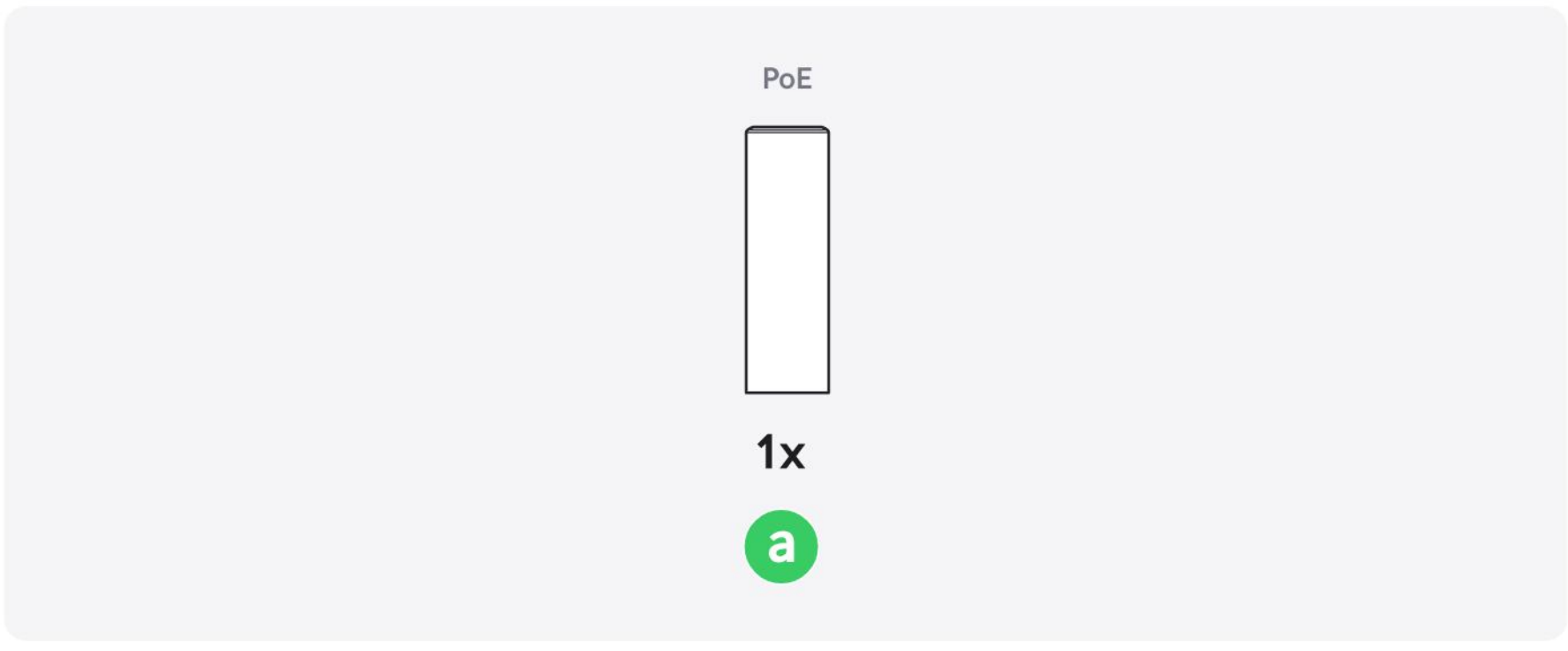

7

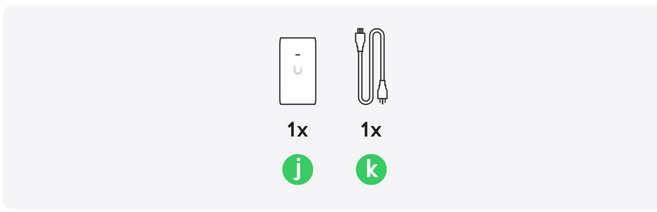
1x
1x
j
k

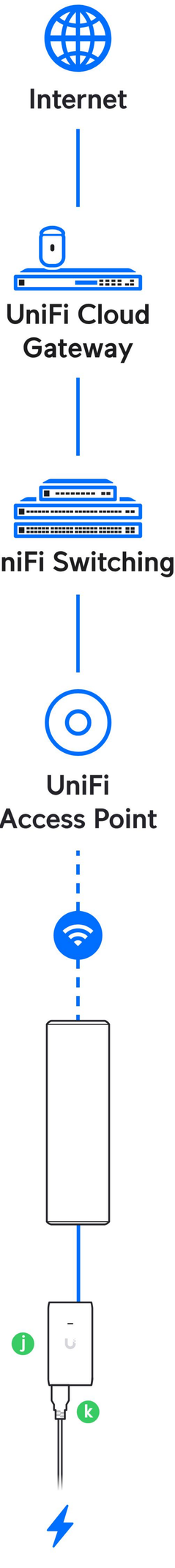
Internet
UniFi Cloud Gateway
UniFi Switching
UniFi Access Point
j
k

8

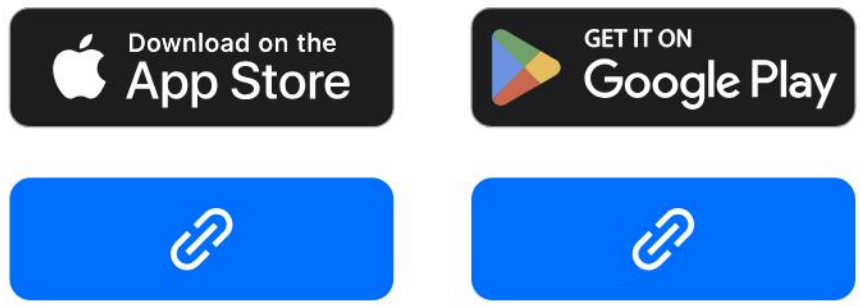



9

Point the U7 Mesh U logos toward each other for the best mesh signal.

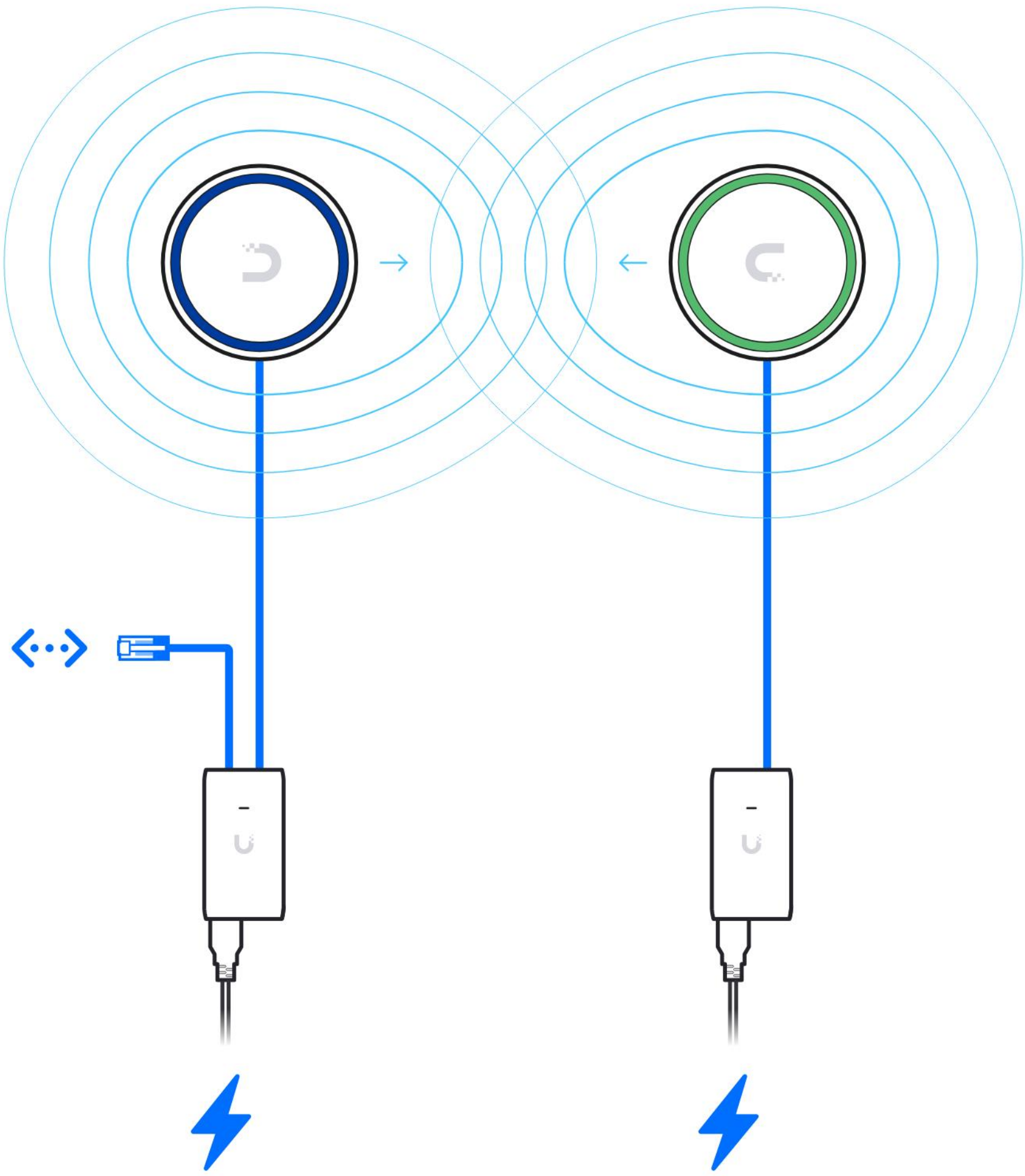

Check the LED ring to find the strongest mesh signal.

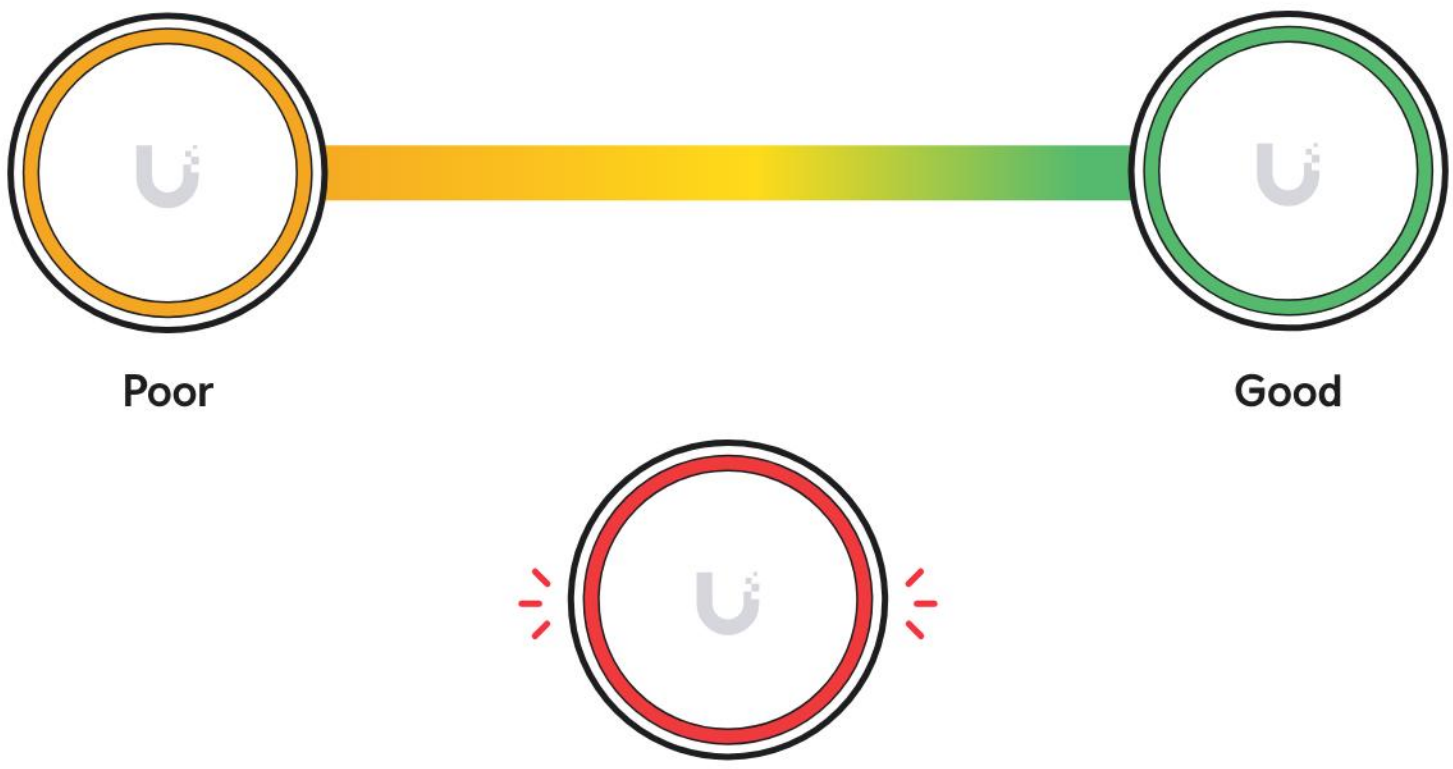

10



1x

h



2x

e

M3



2x

f



1x

i



1x

j

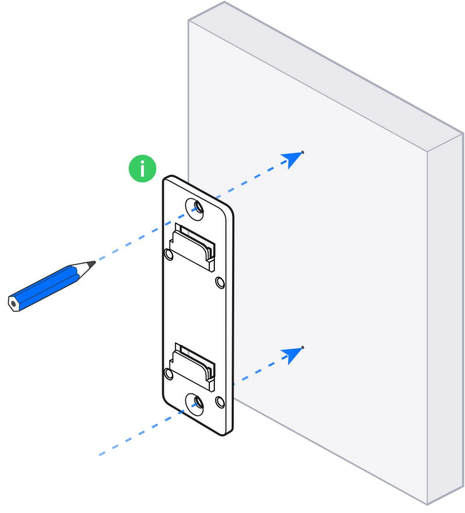
i

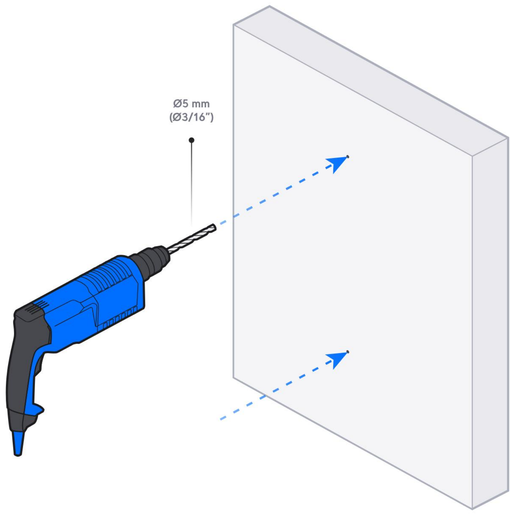
Ø5 mm
(Ø3/16")

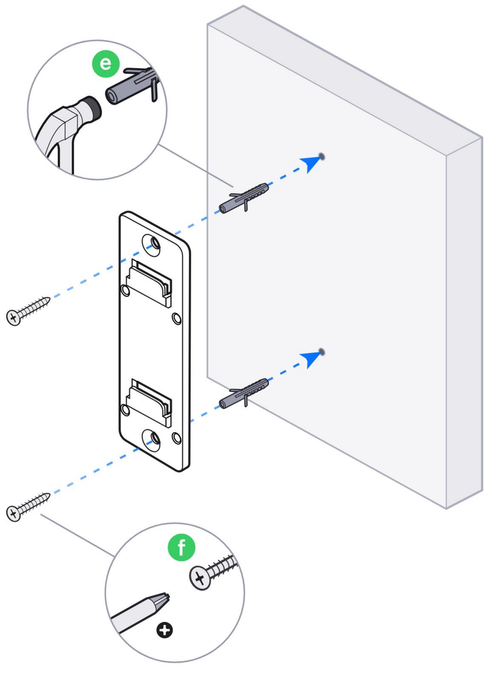
e
f

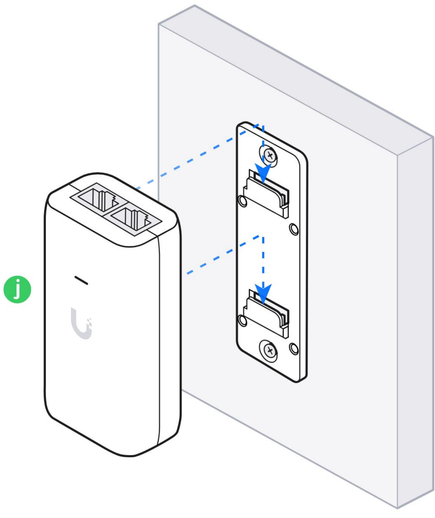
j

Način D: Montaža na drog

Nosilec na drog s priloženima trakovoma

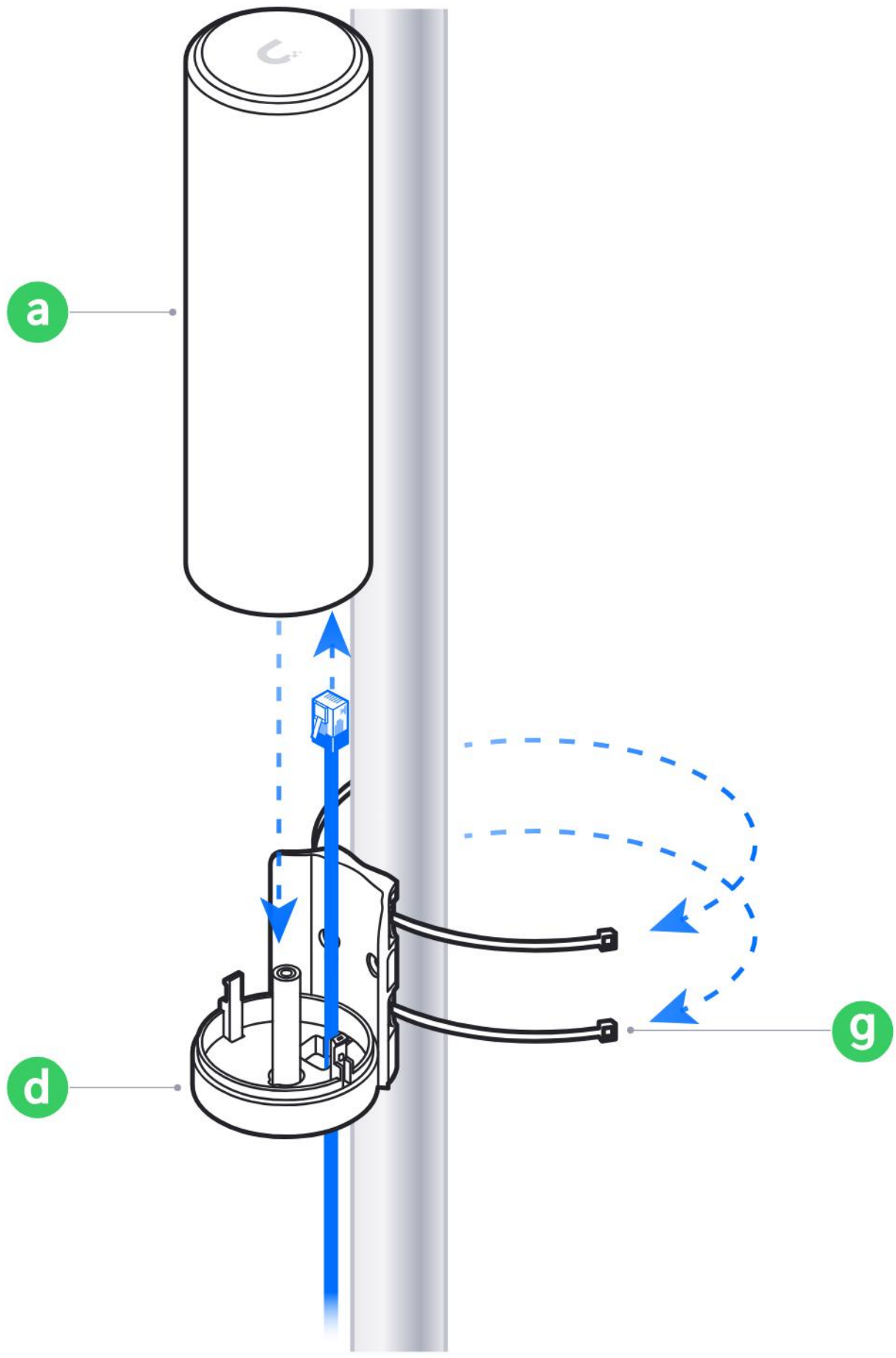

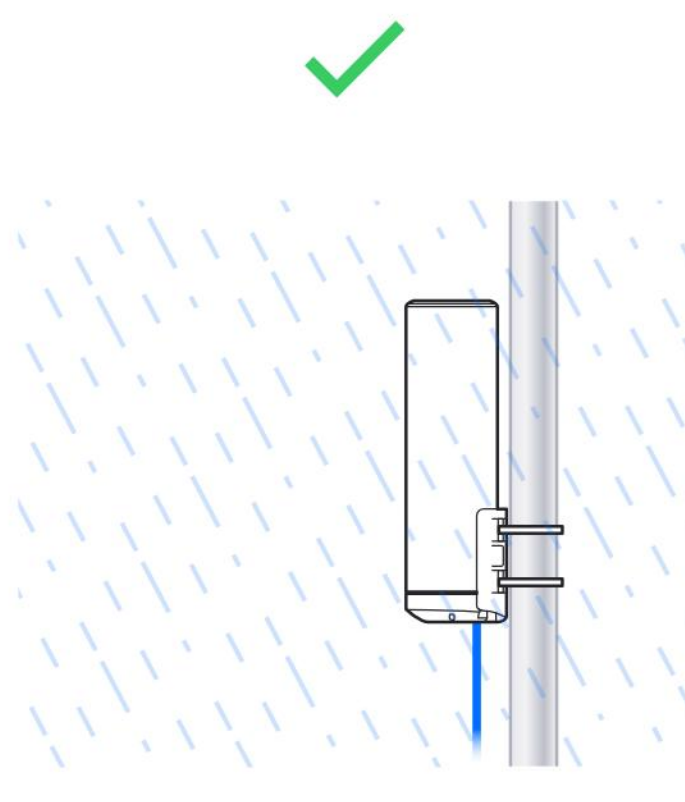

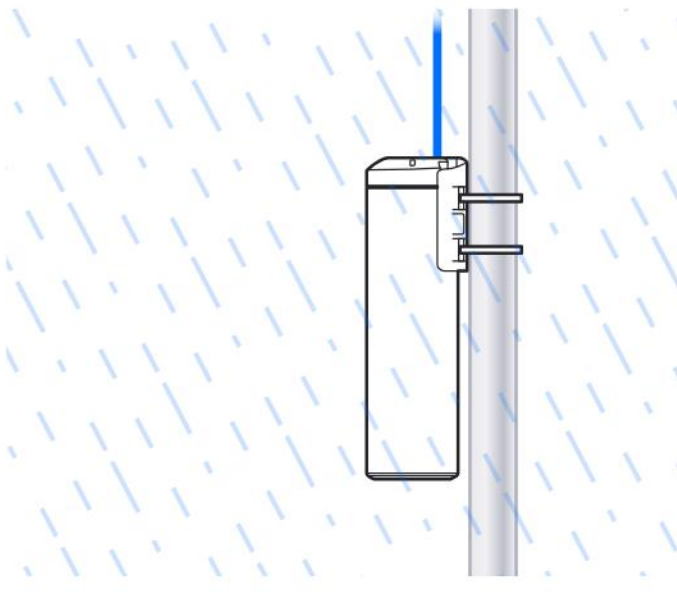

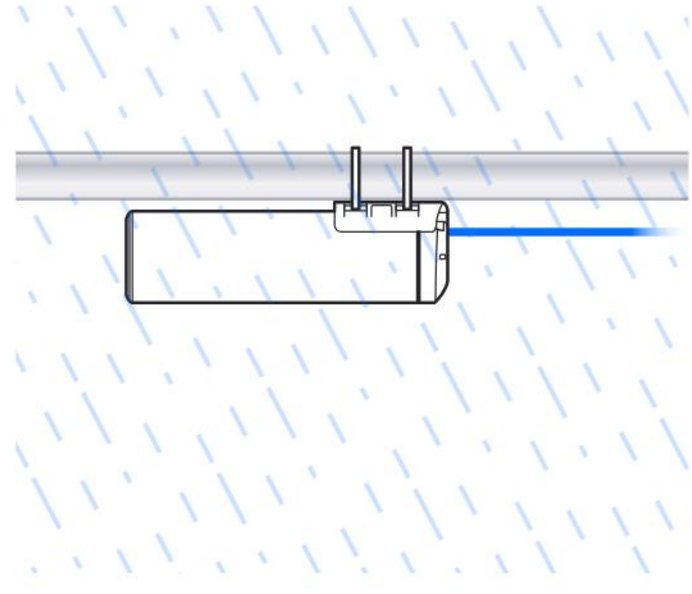

1

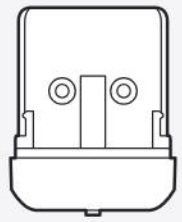

1x

d

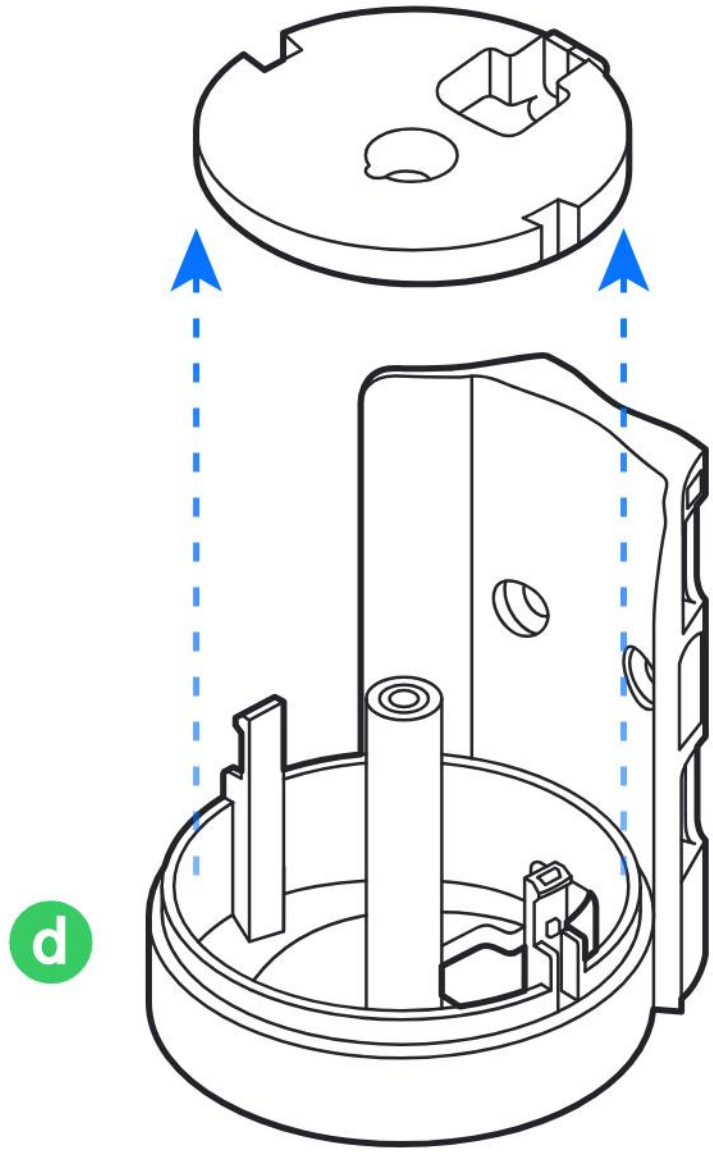

2



2x

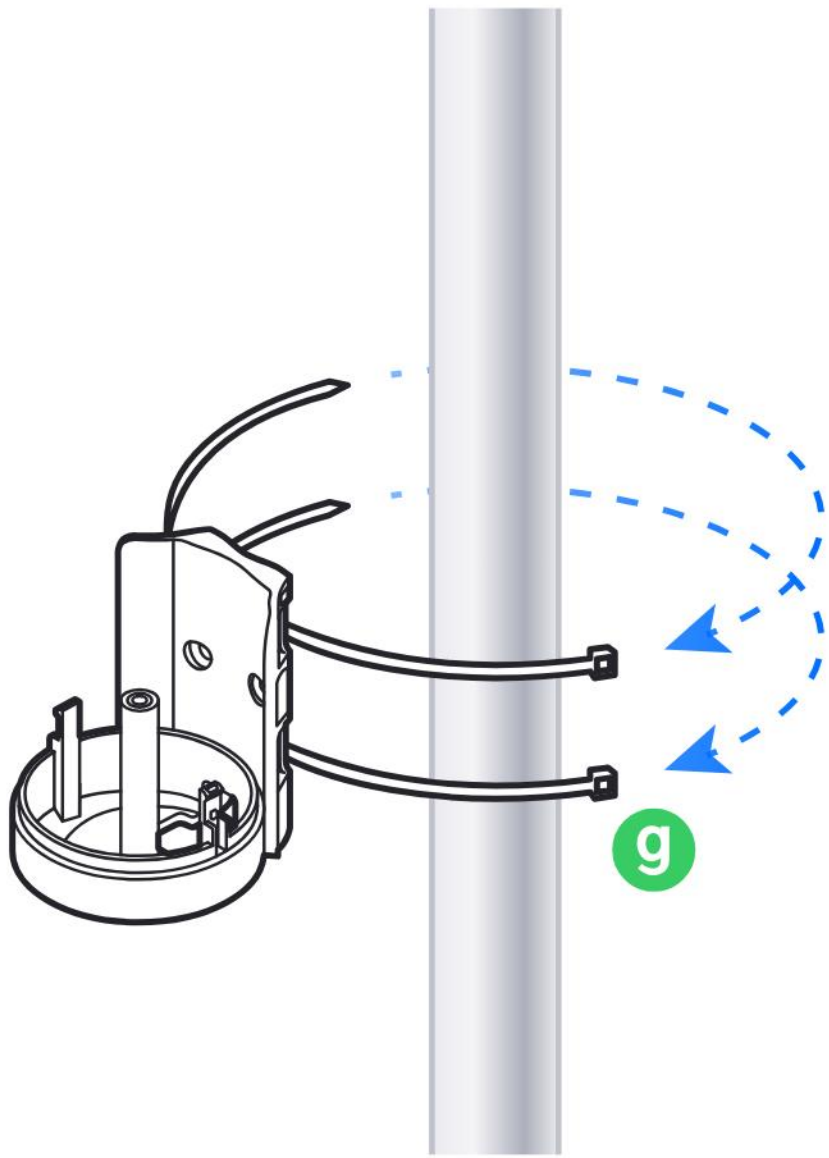

3

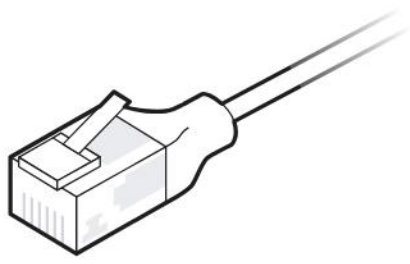

UniFi Etherlighting Patch Cable

Buy ›

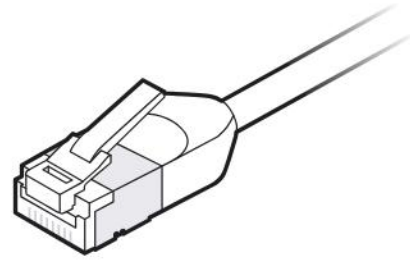

UniFi Premium Patch Cable Outdoor

Buy ›

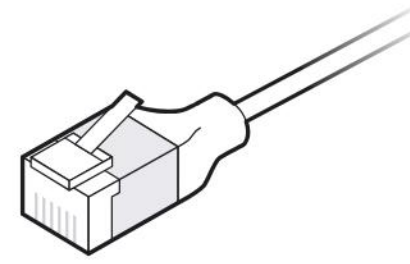

UniFi Premium Patch Cable

Buy ›

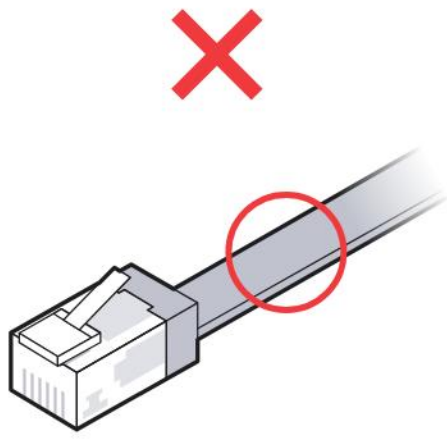

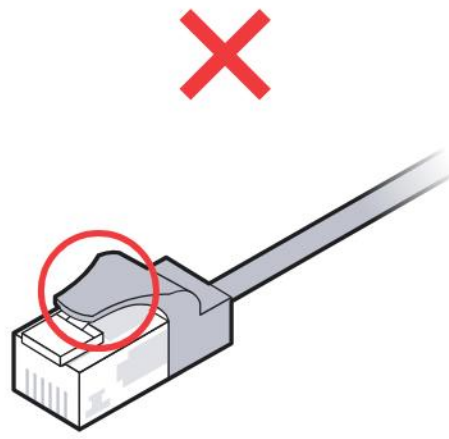

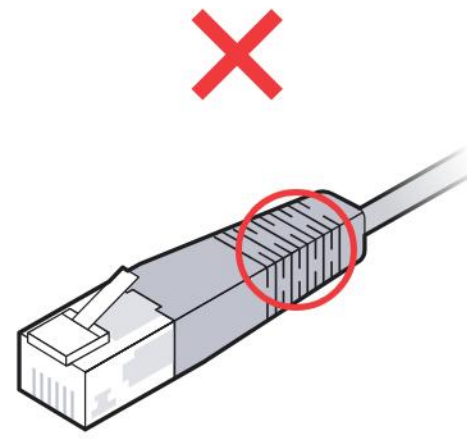

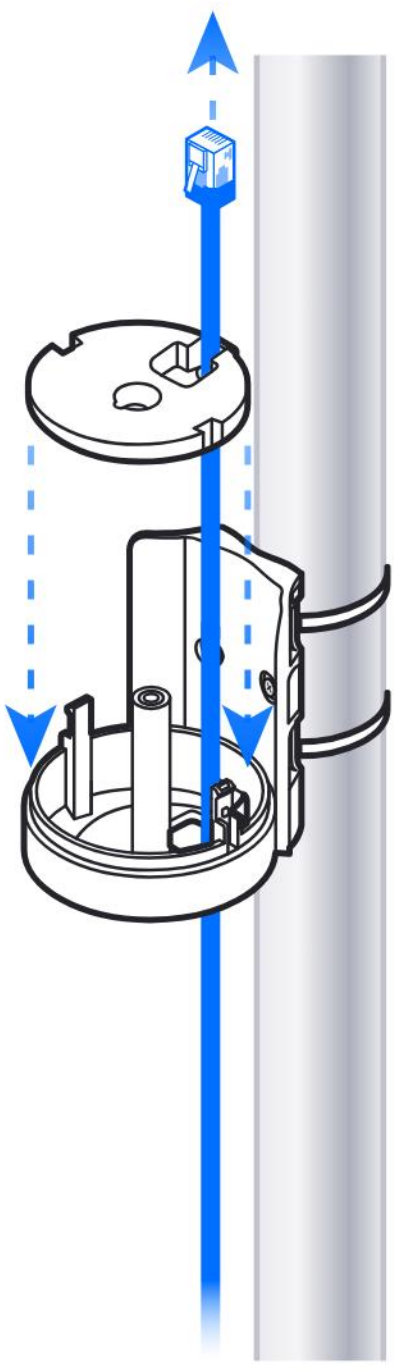

4

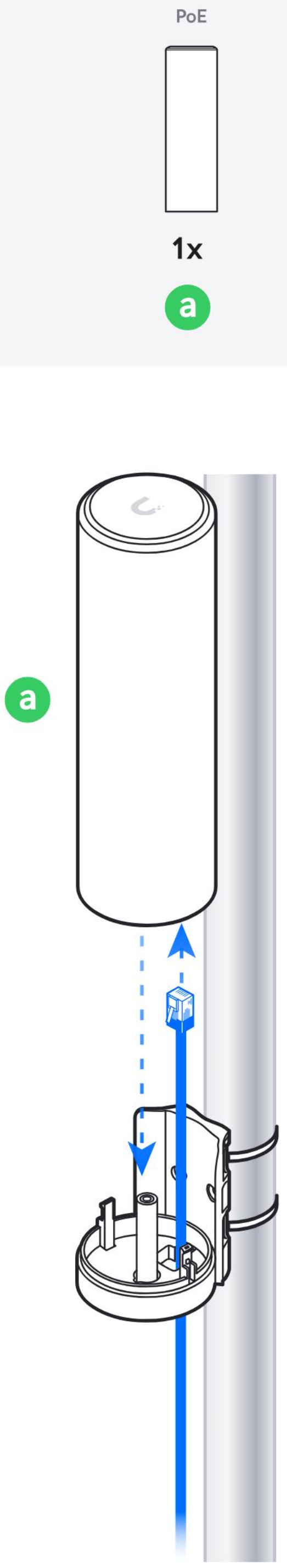

5

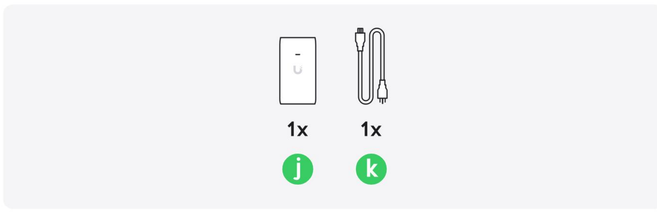
1x
1x
j
k

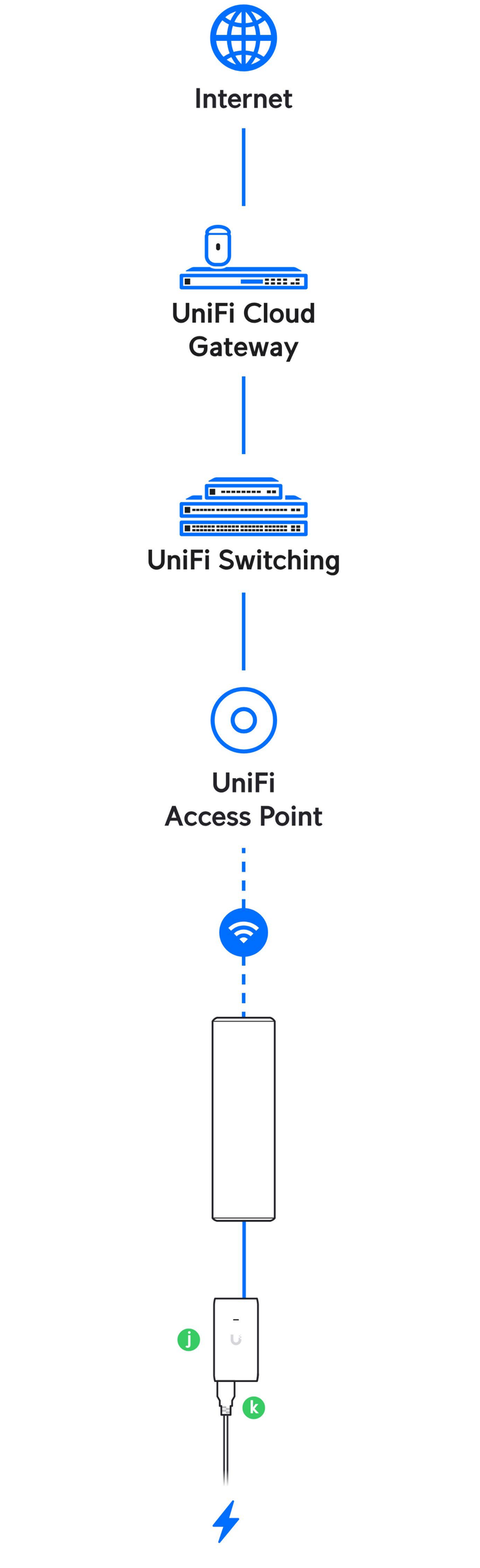
Internet
UniFi Cloud Gateway
UniFi Switching
UniFi Access Point
j
k

6

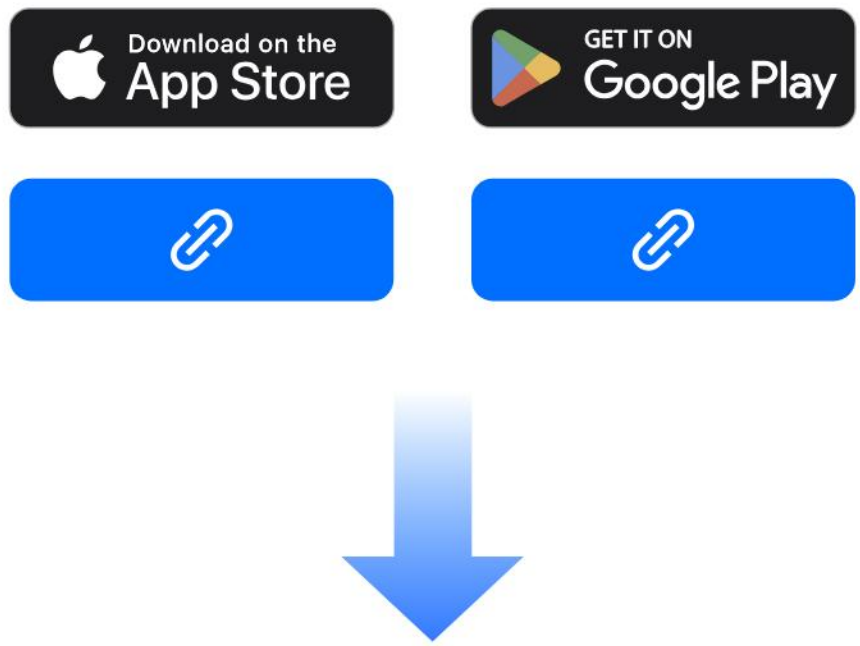



7

Point the U7 Mesh U logos toward each other for the best mesh signal.

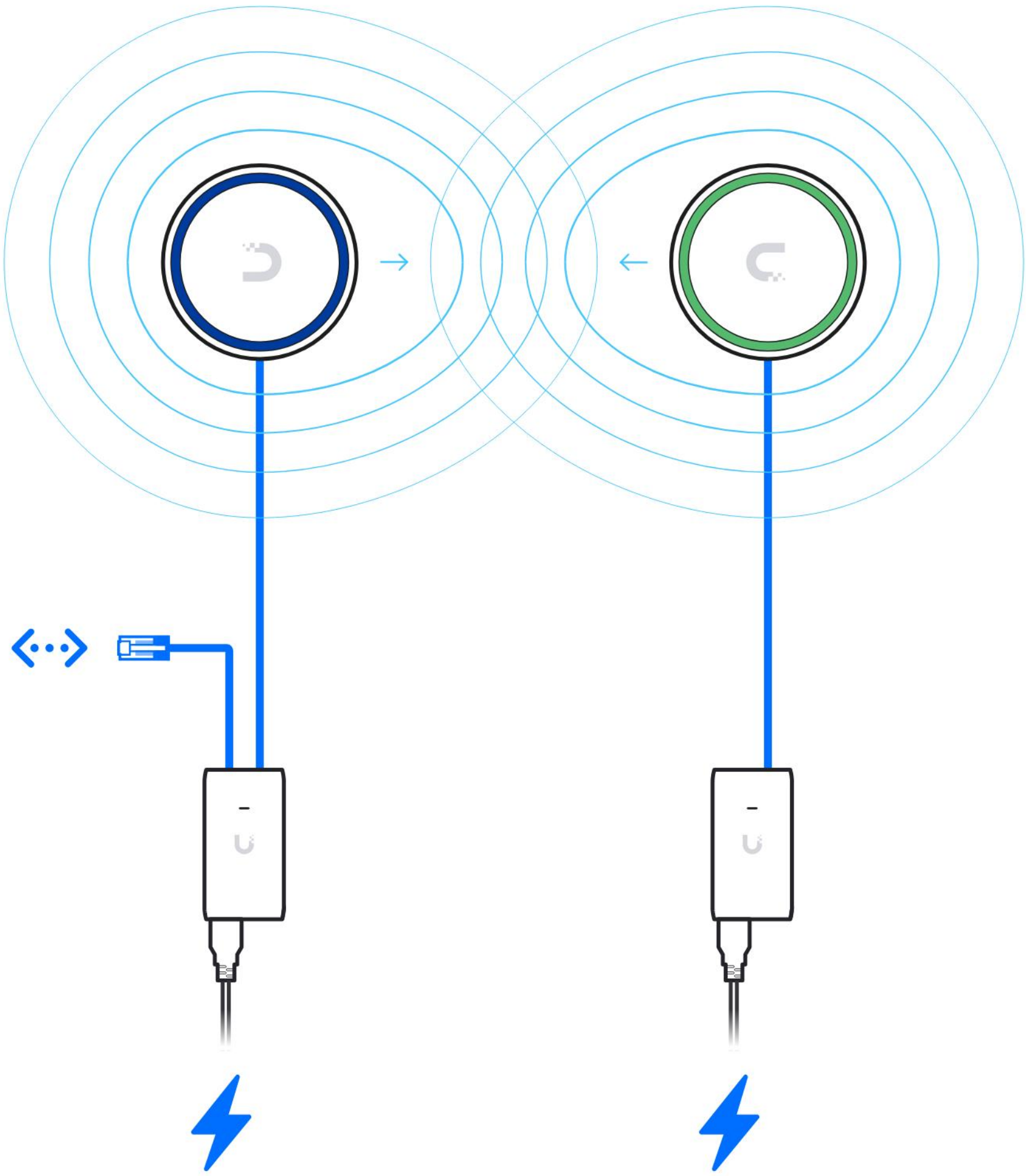

Check the LED ring to find the strongest mesh signal.

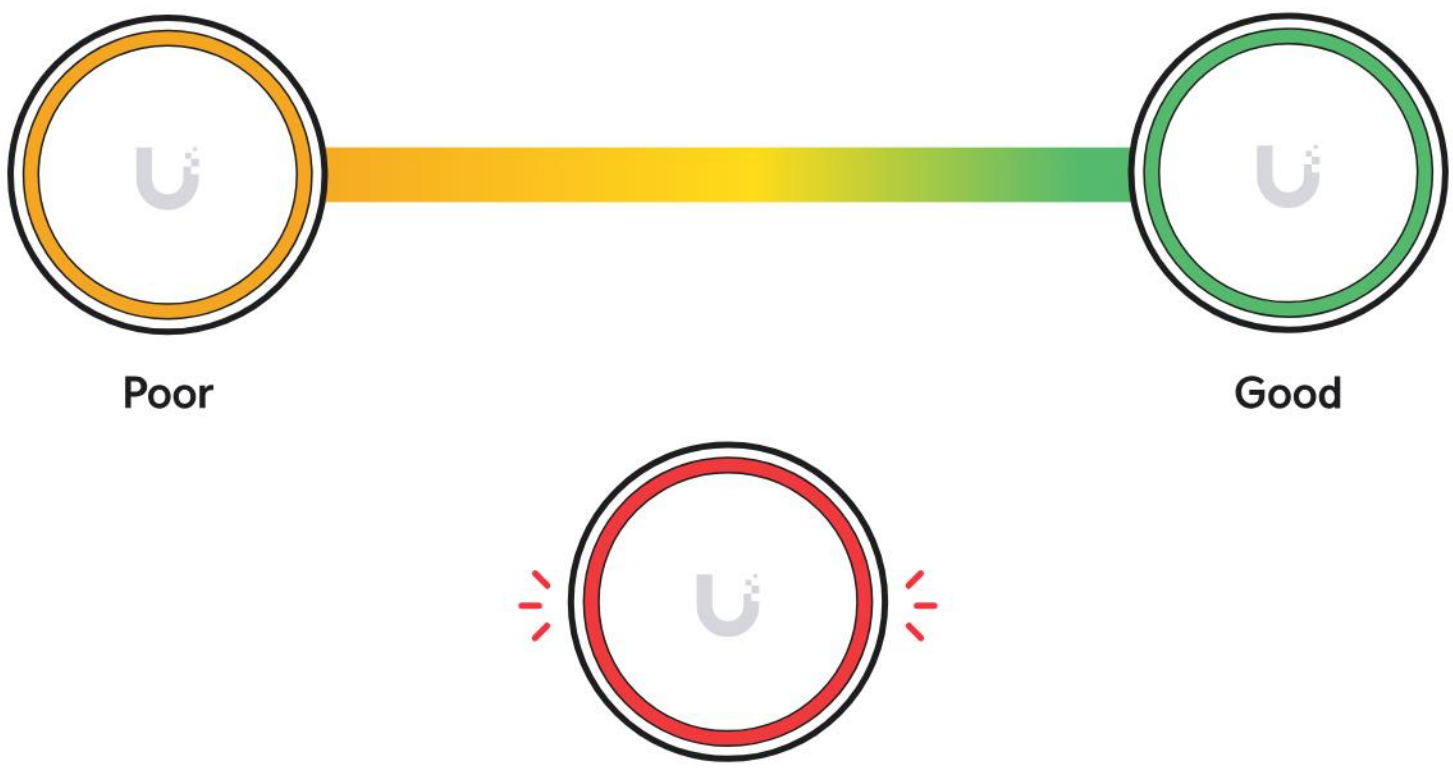

8



1x

h

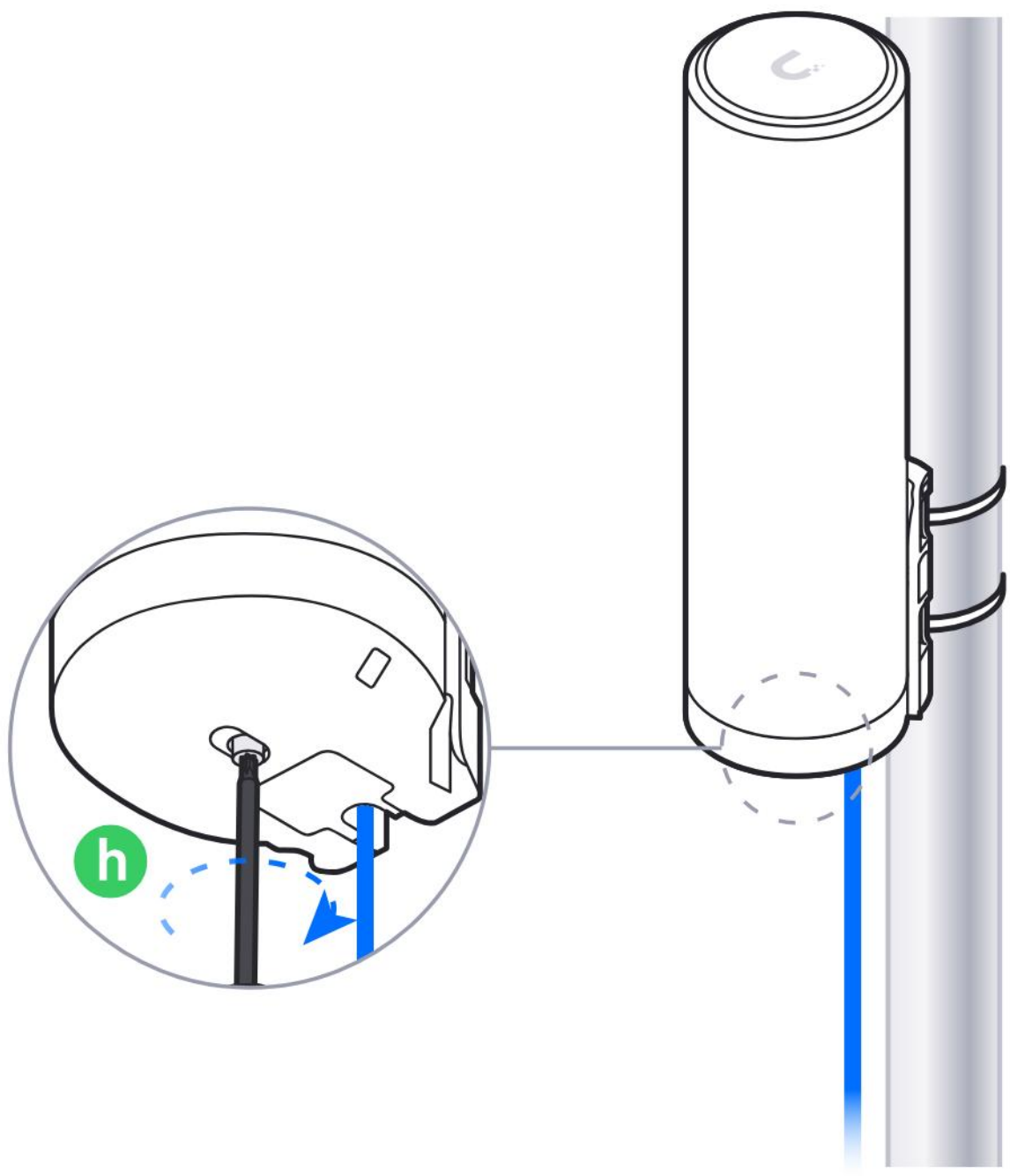

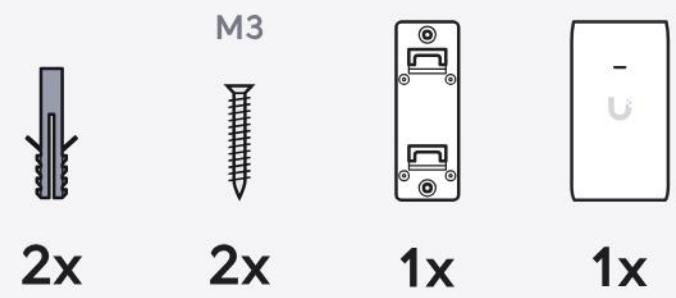

2x 2x 1x 1x

e f i j

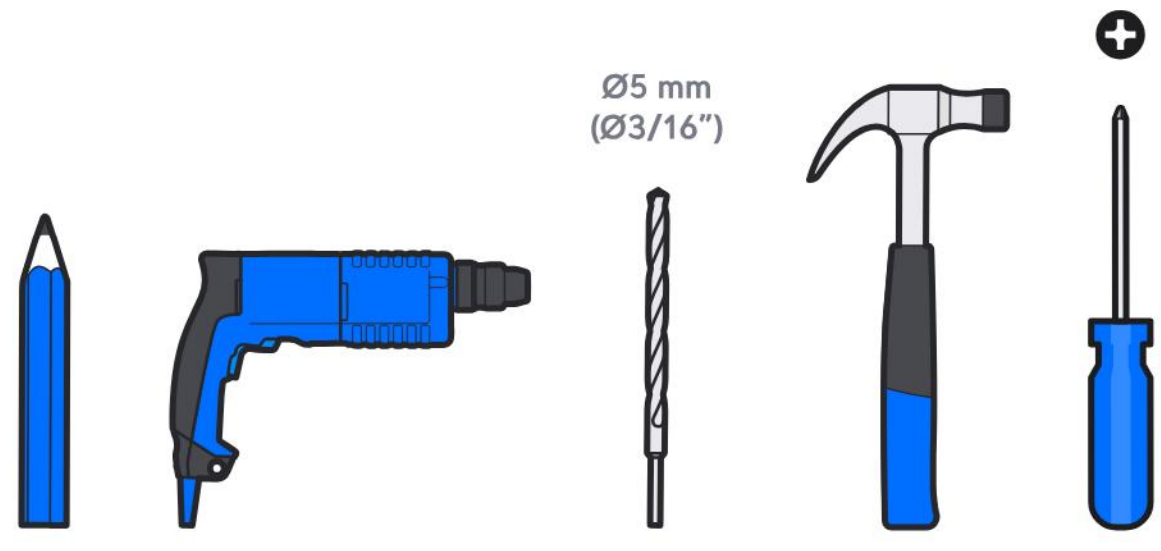

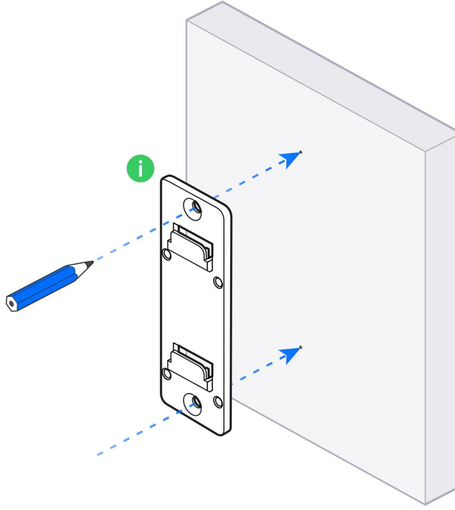

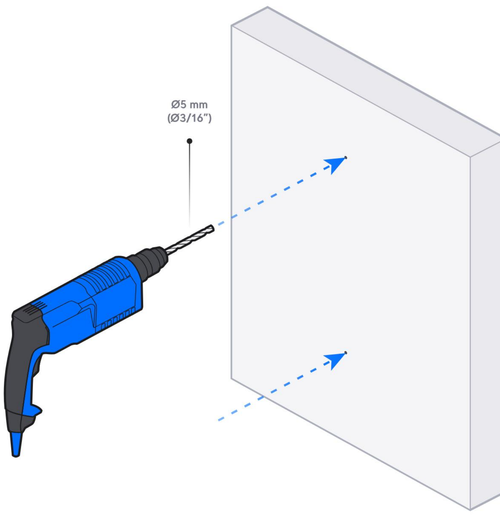

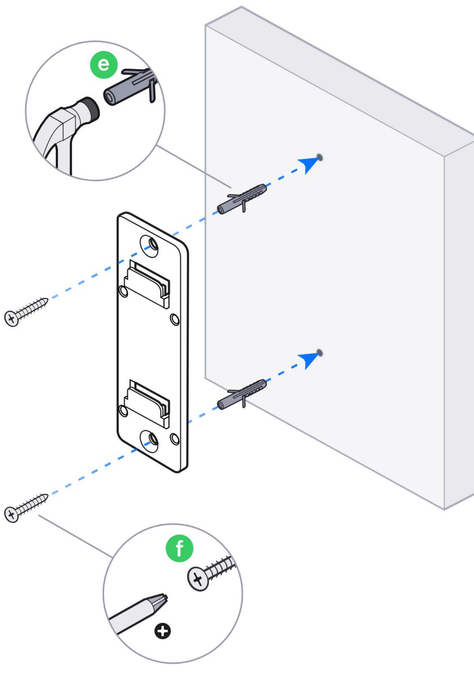

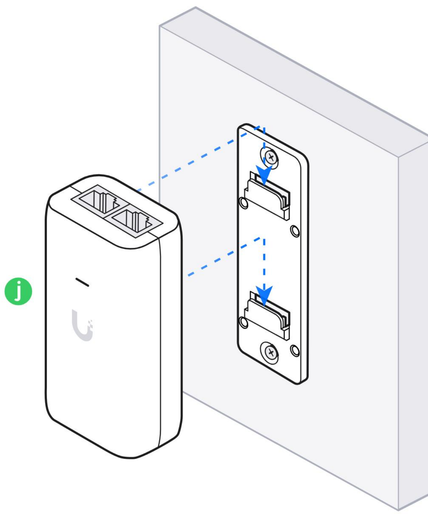

Če potrebujete dodatno pomoč, obiščite Ubiquiti Help Center ali se obrnite na podporo Ubiquiti.